City of Sonoma
Design Review and Historic Preservation Commission
REVISED AGENDA

Meeting of June 16, 2015 - 6:30 P.M.
Community Meeting Room, 177 First Street West
Sonoma, CA 95476

Meeting Length: **No new items will be heard by the Design Review and Historic Preservation Commission after 10:30 PM**, unless the Commission, by majority vote, specifically decides to continue reviewing items. If an item is not heard due to the length of the meeting, the Commission will attempt to schedule a special meeting for the following week. If a special meeting is necessary, potential dates will be established at the close of this meeting, and a date set as soon as possible thereafter.

CALL TO ORDER – Kelso Barnett, Chair

Commissioners: Tom Anderson
Christopher Johnson
Micaelia Randolph
Leslie Tippell

COMMENTS FROM THE PUBLIC
Presentations by audience members on items not appearing on the agenda.

CORRESPONDENCE

ITEM #1 – Sign Review **REQUEST:** Consideration of a new monument sign for an apartment complex. **Applicant:** Burbank Housing Staff: Wendy Atkins	**Project Location:** 650 Fourth Street West **General Plan Designation:** Medium Density Residential (MR) **Zoning:** **Planning Area:** Central-West Area **Base:** Medium Density Residential (R-M) **Overlay:** None	**RECOMMENDED ACTION:** Commission discretion. **CEQA Status:** Categorically Exempt
ITEM #2 – Sign Review **REQUEST:** Consideration of a revised sign program for a church (First Congregational Church of Sonoma). **Applicant:** First Congregational Church of Sonoma Staff: Wendy Atkins	**Project Location:** 252 West Spain Street **General Plan Designation:** Low Density Residential (LR) **Zoning:** **Planning Area:** Northwest Area **Base:** Low Density Residential (R-L) **Overlay:** Historic (/H)	**RECOMMENDED ACTION:** Commission discretion. **CEQA Status:** Categorically Exempt

ITEM #3 – Design Review **ISSUE:** Continued consideration of exterior colors and materials for a 7-unit Planned Unit Development (Fifth Street West Homes). **Staff:** Wendy Atkins **Applicant:** Altus Equity Group LP	**Project Location:** 405 Fifth Street West **General Plan Designation:** Commercial (C) **Zoning:** **Planning Area:** Northwest Area **Base:** Commercial (C) **Overlay:** None	**RECOMMENDED ACTION:** Commission discretion. **CEQA Status:** Categorically Exempt
ITEM #4 – Design Review **ISSUE:** Consideration of new paints colors for a commercial building (Sweet Scoops Homemade Ice Cream). **Staff:** Wendy Atkins **Applicant:** Sweet Scoops Homemade Ice Cream	**Project Location:** 408 First Street East **General Plan Designation:** Commercial (C) **Zoning:** **Planning Area:** Downtown District **Base:** Commercial (C) **Overlay:** Historic (/H)	**RECOMMENDED ACTION:** Commission discretion. **CEQA Status:** Categorically Exempt
ITEM #5 – Demolition Review **ISSUE:** Demolition of a single-family residence located on a residential property. **Staff:** Wendy Atkins **Applicant:** Strata Architects	**Project Location:** 557 Fourth Street East **General Plan Designation:** Low Density Residential (LR) **Zoning:** **Planning Area:** Central-East Area **Base:** Low Density Residential (R-L) **Overlay:** Historic (/H)	**RECOMMENDED ACTION:** Commission discretion. **CEQA Status:** Categorically Exempt
ITEM #6 – Design Review **ISSUE:** Design review for a new single-family residence. **Staff:** Wendy Atkins **Applicant:** Strata Architects	**Project Location:** 557 Fourth Street East **General Plan Designation:** Low Density Residential (LR) **Zoning:** **Planning Area:** Central-East Area **Base:** Low Density Residential (R-L) **Overlay:** Historic (/H)	**RECOMMENDED ACTION:** Commission discretion. **CEQA Status:** Categorically Exempt

ITEM #7 – Design Review **ISSUE:** Consideration of design review and new signs for a commercial building (3 Badge Beverage Company). **Staff:** Wendy Atkins **Applicant:** Gwen Stanley (Ross Drulis Cusenbery)	**Project Location:** 32 Patten Street **General Plan Designation:** Mixed Use (MU) **Zoning:** **Planning Area:** Downtown District **Base:** Mixed Use (MX) **Overlay:** Historic (/H)	**RECOMMENDED ACTION:** Commission discretion. **CEQA Status:** Categorically Exempt
ITEM #8 – Discussion Item **ISSUE:** Consideration of a new Street Name Signage Replacement program. **Staff:** Dan Takasugi		**RECOMMENDED ACTION:** Forward to City Council, with recommendations. **CEQA Status:** Categorically Exempt

ISSUES UPDATE

COMMENTS FROM THE COMMISSION

COMMENTS FROM THE AUDIENCE

ADJOURNMENT

I do hereby certify that a copy of the foregoing agenda was posted on the City Hall bulletin board on June 12, 2015, 2015.

CRISTINA MORRIS, ADMINISTRATIVE ASSISTANT

Rights of Appeal: **Any decision of the Design Review and Historic Preservation Commission may be appealed to the City Council.** Appeals must be filed with the City Clerk within fifteen (15) calendar days following the Design Review and Historic Preservation Commission's decision, unless the fifteenth day falls on a weekend or a holiday, in which case the appeal period ends at the close of the next working day at City Hall. Appeals must be made in writing and must clearly state the reason for the appeal. Appeals will be set for hearing before the City Council on the earliest available agenda.

Copies of all staff reports and documents subject to disclosure that relate to any item of business referred to on the agenda are available for public inspection the Monday before each regularly scheduled meeting at City Hall, located at No. 1 The Plaza, Sonoma CA, (707) 938-3681. Any documents subject to disclosure that are provided to all, or a majority of all, of the members of the Design Review and Historic Preservation Commission regarding any item on this agenda after the agenda has been distributed will be made available for inspection at the Administrative Assistant office, No. 1 The Plaza, Sonoma CA during regular business hours.

If you challenge the action of the Design Review and Historic Preservation Commission in court, you may be limited to raising only those issues you or someone else raised at the public hearing described on the agenda, or in written correspondence delivered to the Administrative Assistant, at or prior to the public hearing.

In accordance with the Americans With Disabilities Act, if you need special assistance to participate in this meeting, please contact the City Clerk (707) 933-2216. Notification 48 hours before the meeting will enable the City to make reasonable arrangements to ensure accessibility to this meeting.

City of Sonoma
Design Review and Historic Preservation Commission
Agenda Item Summary

DRHPC Agenda Item:	**1**
Meeting Date:	**06/16/15**

Applicant	**Project Location**
Burbank Housing	650 Fourth Street West

Historical Significance

- ☐ Listed on National Register of Historic Places, including Sonoma Plaza district (Significant)
- ☐ Listed on California Register of Historic Resources (Significant)
- ☐ Listed within Local Historic Resources Survey (Potentially Significant)
- ☐ Over 50 years old (Potentially Significant)

  Year built: Circa 1982

Request

Consideration of a new monument sign for an apartment complex located at 650 Fourth Street West.

Summary

Illuminated Freestanding Sign: A new, one-sided monument sign, 25 square feet in area per side (5 feet tall by 5 feet wide), is proposed in the front of the apartment complex facing Fourth Street West. The sign would be located parallel to Fourth Street West, south of the driveway entrance. The sign would be carved monolithically from a "high density urethane" (HDU) material featuring a "stucco like" texture. The applicant has indicated that the sign is proposed to be illuminated with an in-ground concealed fixture, which would contain an 8 watt bulb (equivalent of 25W incandescent) (see attached specification sheet). The applicant is proposing to illuminate the sign from dusk to dawn.

Aggregate Sign Area: Based on the property's frontage on Fourth Street West (62 feet), the maximum aggregate sign area allowed for the parcel is 24.4 square feet. The total aggregate sign area for the property would be ±25 square feet. The proposal is not consistent with this requirement. The applicant is asking for a variance from this requirement

Residential Sign Regulations (18.16.032): One subdivision or apartment identification sign is allowed for each project in any residential zone. Such signage shall be permitted only on the site of the use being identified. The sign shall not exceed 10 square feet in area, with a maximum horizontal length of five feet. In the case of freestanding signs, a maximum of seven square feet per sign with a maximum horizontal length of five feet is allowed. The proposal is not consistent with this requirement in that the sign would have an area of 25 spare feet. The applicant is asking for a variance from this requirement.

Size Limitations: Each face of a two-sided sign shall not exceed 32 square feet in area (§18.16.022). The proposal is consistent with this requirement in each face would have an area of 22 square feet.

Number of Signs: Only one monument sign is allowed per property, and a maximum of two signs are normally permitted for any one business (§18.16.010). The proposal complies with these requirements.

Basic Findings: In order to approve any application for sign review, the review authority must make all of the following findings:

1. The proposed signage complies with applicable policies and regulations, as set forth in this sign ordinance (except for approved variances), all other city ordinances, and the general plan;

2. On balance, the proposed signage is consistent with the purpose and intent expressed by SMC 18.04.010 and the applicable guidelines for signs set forth by SMC 18.60.010, Appendix A – Design guidelines for signs; and,

3. The proposed signage is harmonious and consistent overall with the location of the site, including adjacent and surrounding development and its environmental features.

Variances: As noted above, the proposed freestanding sign would exceed the allowable area for a freestanding apartment identification sign sign, and exceed the allowable aggregate sign area. The DRHPC may grant variances from the provisions of the sign ordinance provided that certain findings can be made (see below).

1. Exceptional or extraordinary circumstances or conditions, not resulting from any act of the owner or applicant, apply to the location under consideration and not generally to other businesses or properties in the vicinity;

2. Strict adherence to a regulation may cause unnecessary hardship or prohibit the exercise of creative design, and the application submitted is extraordinary and outstanding in design;

3. The exception is the minimum necessary to serve its intended use;

4. The exception is in conformance with the purpose and intent of this title;

5. The granting of the variance will not be detrimental to the public interest or welfare, or injurious to properties or improvements in the vicinity.

Other permits required: In addition to the requirements of this title, all signs and building improvements shall be in conformance with applicable requirements of the 2013 California Building Code and where required by the 2013 California Building Code, shall obtain a building permit prior to installation.

Commission Discussion

Design Review and Historic Preservation Commission Action

❑ Approved ❑ Disapproved ❑ Referred to: _____ ❑ Continued to: _____

Roll Call Vote: _____ Aye _____ Nay _____ Abstain _____ Absent

DRHPC Conditions or Modifications

Attachments

1. *Sign drawing*
2. *Site Plan*
3. *Sign description*
4. *Picture of existing and proposed signs*
5. *Light fixture specification sheet*

cc: Burbank Housing
Attn: Volker Strifler
790 Sonoma Avenue
Santa Rosa, Ca 95404

Sonoma County Housing Authority
1440 Guerneville Road
Santa Rosa, CA 95403-4107

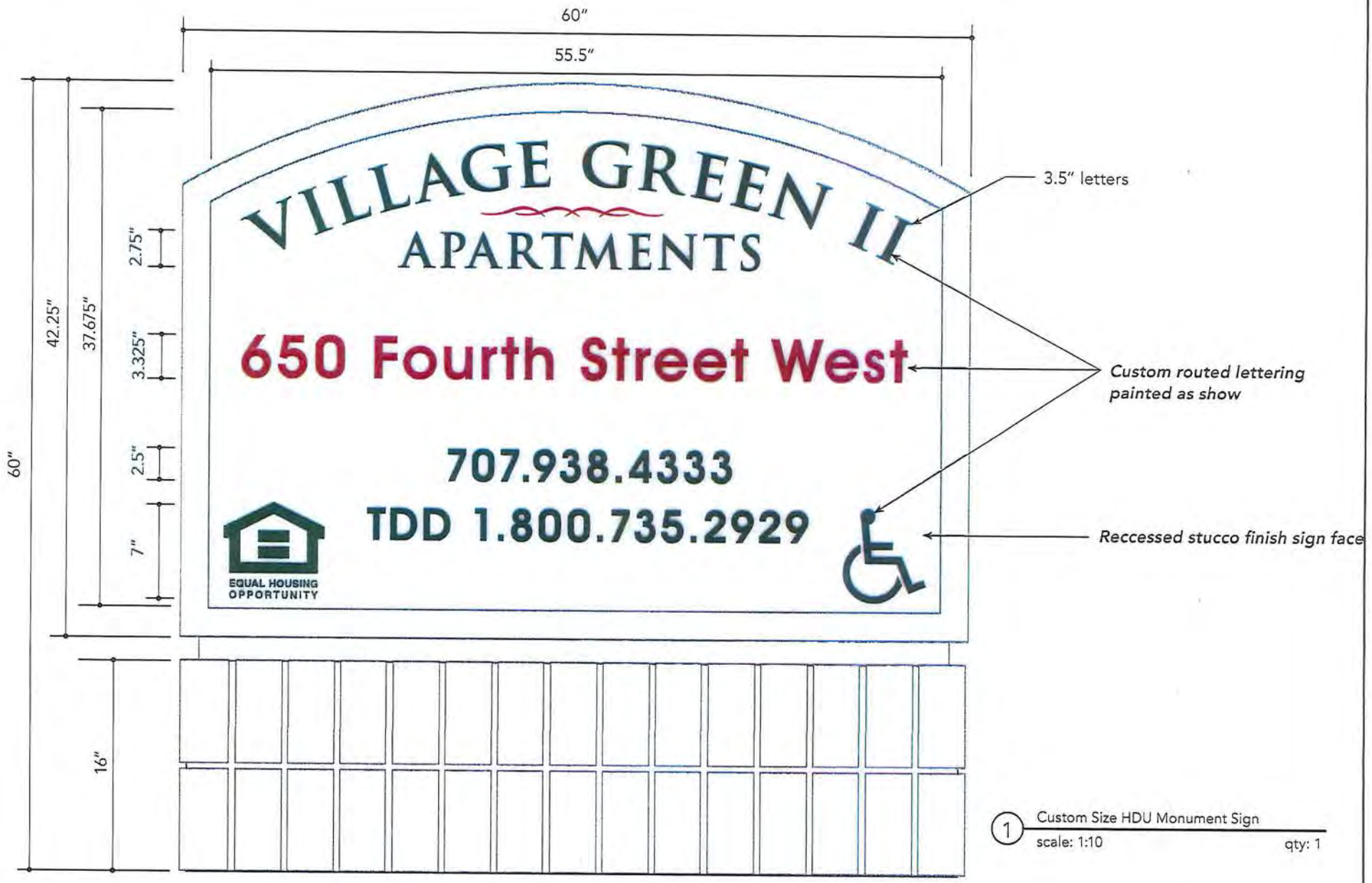

1 Custom Size HDU Monument Sign
scale: 1:10 qty: 1

ORDER NO.	CLIENT:	CONTACT:	VERSION:	MATERIALS:
1222	BURBANK HOUSING	Volker Strifler 707.526.1020 vstrifler@burbankhousing.org	1222_VG Monument Sign_v1 04.17.2015	Steel Pipe Custom HDU routed sign Expanding Polymeric Resin Foam Concrete
DESIGNER: b.bryen				
PAGE: 1 of 4				

FASTSIGNS. More than fast. More than signs.™
1372 N. McDowell Blvd.
Petaluma, CA 94954
2063@fastsigns.com • F: 707.981.7350

I have checked this proof for correct spelling, formatting, punctuation and visual clarity. I approve all colors*, sizes and specifications as provided by this proof. Based on this proof, I authorize FASTSIGNS to produce this job to agreed specifications. * Colors are a representation only. Actual colors may vary slightly. Exact Pantone colors can not be guaranteed.

All elements and information contained in this drawing are the property of FASTSIGNS of Santa Rosa. Any reproduction or distribution of the drawing(s) to outside persons without written permission from FASTSIGNS of Santa Rosa will be punished to the fullest extent of the law.

MAY 0 8 2015

5 Sign Location Map
scale: nts

ORDER NO.	CLIENT:	CONTACT:	VERSION:	MATERIALS:
1222	BURBANK HOUSING	Volker Strifler 707.526.1020 vstrifler@burbankhousing.org	1222_VG Monument Sign_v1 04.17.2015	Steel Pipe Custom HDU routed sign Expanding Polymeric Resin Foam Concrete
DESIGNER: b.bryen				
PAGE: 4 of 4				

FASTSIGNS.
More than fast. More than signs.™
1372 N. McDowell Blvd.
Petaluma, CA 94954
2063@fastsigns.com • F: 707.981.7350

I have checked this proof for correct spelling, formatting, punctuation and visual clarity. I approve all colors*, sizes and specifications as provided by this proof. Based on this proof, I authorize FASTSIGNS to produce this job to agreed specifications. * Colors are a representation only. Actual colors may vary slightly. Exact Pantone colors can not be guaranteed.

All elements and information contained in this drawing are the property of FASTSIGNS of Santa Rosa. Any reproduction or distribution of the drawing(s) to outside persons without written permission from FASTSIGNS of Santa Rosa will be punished to the fullest extent of the law.

MAY 0 8 2015

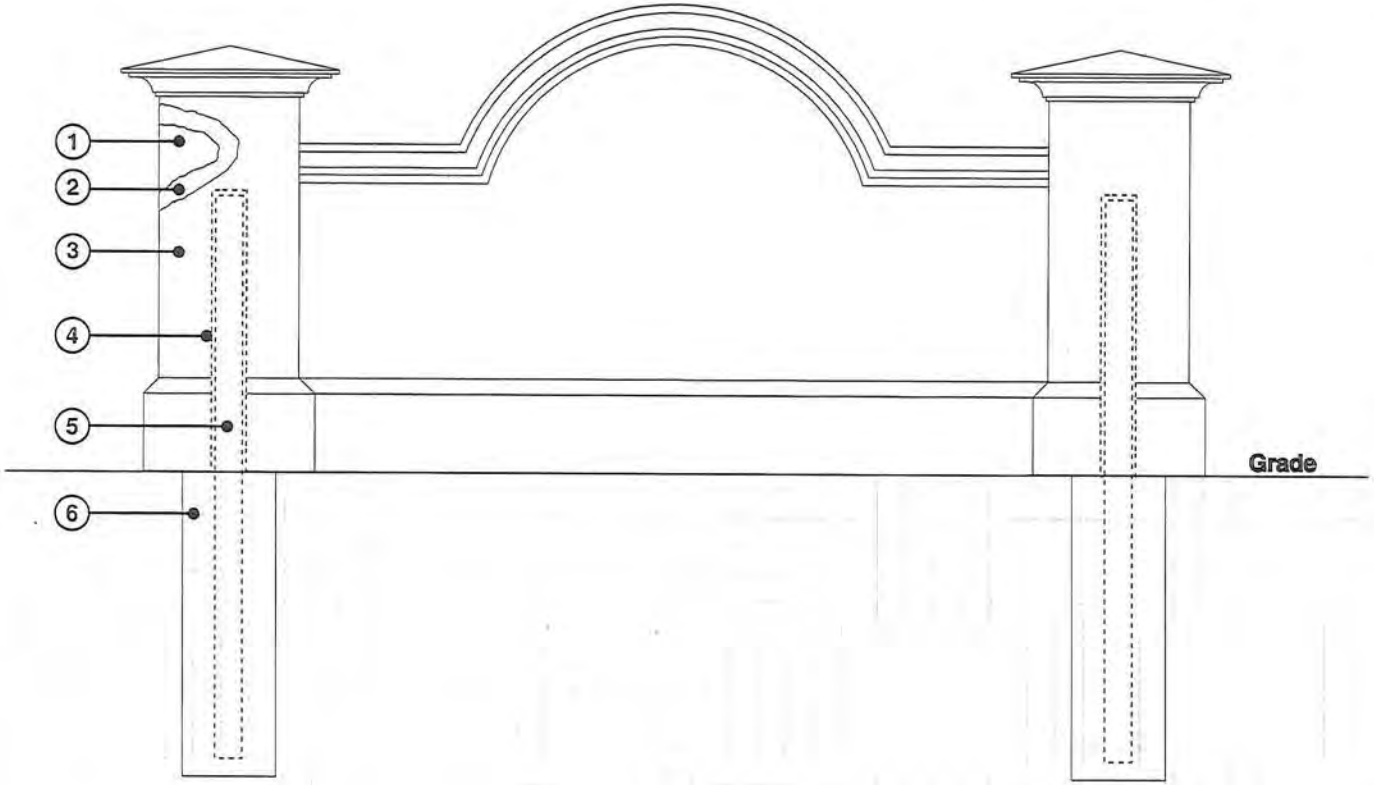

2 Expanded View
scale: nts

1. Core of Structure is Molded Expanded Polystyrene.1# C. F.
2. Aromatic Fast Cure Poly-armor™ Hardcoating Impact Resistant Hard Coat Finish.
3. Finished Surface is 100% Aggregated Acrylic.
4. 4" Schedule 40 PVC Pipe is Bonded Into Center of Structure.
5. Steel Pipe is Inserted Upon Installation of Structure on Site with Expanding Polymeric Resin Foam.
6. Concrete Footing as Required by Local Code. Post Must Typically Extend 2' to 4' Into Concrete

ORDER NO.	CLIENT:	CONTACT:	VERSION:	MATERIALS:
1222	BURBANK HOUSING	Volker Strifler 707.526.1020 vstrifler@burbankhousing.org	1222_VG Monument Sign_v1 04.17.2015	Steel Pipe Custom HDU routed sign Expanding Polymeric Resin Foam Concrete
DESIGNER: b.bryen				
PAGE: 2 of 4				

FASTSIGNS
More than fast. More than signs.™
1372 N. McDowell Blvd.
Petaluma, CA 94954
2063@fastsigns.com • F: 707.981.7350

I have checked this proof for correct spelling, formatting, punctuation and visual clarity. I approve all colors*, sizes and specifications as provided by this proof. Based on this proof, I authorize FASTSIGNS to produce this job to agreed specifications. * Colors are a representation only. Actual colors may vary slightly. Exact Pantone colors can not be guaranteed.

All elements and information contained in this drawing are the property of FASTSIGNS of Santa Rosa. Any reproduction or distribution of the drawing(s) to outside persons without written permission from FASTSIGNS of Santa Rosa will be punished to the fullest extent of the law.

MAY 0 8 2015

3 Existing Signage
scale: nts

4 Proposed Replacement Sign
scale: nts

ORDER NO.	CLIENT:	CONTACT:	VERSION:	MATERIALS:
1222	BURBANK HOUSING	Volker Strifler 707.526.1020 vstrifler@burbankhousing.org	1222_VG Monument Sign_v1 04.17.2015	Steel Pipe Custom HDU routed sign Expanding Polymeric Resin Foam Concrete
DESIGNER: b.bryen				
PAGE: 3 of 4				

FASTSIGNS
More than fast. More than signs.™
1372 N. McDowell Blvd.
Petaluma, CA 94954
2063@fastsigns.com • F: 707.981.7350

I have checked this proof for correct spelling, formatting, punctuation and visual clarity. I approve all colors*, sizes and specifications as provided by this proof. Based on this proof, I authorize FASTSIGNS to produce this job to agreed specifications. * Colors are a representation only. Actual colors may vary slightly. Exact Pantone colors can not be guaranteed.

All elements and information contained in this drawing are the property of FASTSIGNS of Santa Rosa. Any reproduction or distribution of the drawing(s) to outside persons without written permission from FASTSIGNS of Santa Rosa will be punished to the fullest extent of the law.

MAY 0 8 2015

UL Certified Fixture and Durability:
Our in ground light fixture is UL certified and is made of ultra durable commercial grade ABS plastic

Need a Photocell?
Wire a photocell (Call to Order) to the fixtures power line and never have to worry about turning these in-ground lights on or off. Make sure to order the power post stake to install the photocell on.

Bulbs
Our in-ground well light comes standard with a 120 volt 8w LED PAR20 bulb. You can choose to upgrade to more powerful bulbs such as our 13w LED PAR30 bulb or our 18w LED PAR38 bulb.

Voltage
Our in ground lights are designed to work with 120V.

Free Items Included!
These items come free with our In Ground Well Light:

- 1 x Grill Cover
- 1 x Open Cover
- 1 x Flat Glass
- 1 x Convex Glass
- 1 x Unit Gasket
- 2 x Glass Gasket

- 5 x Shade Screws
- 1 X 18" STV 16 guage Cable
- 1 x Wire Through Assembly

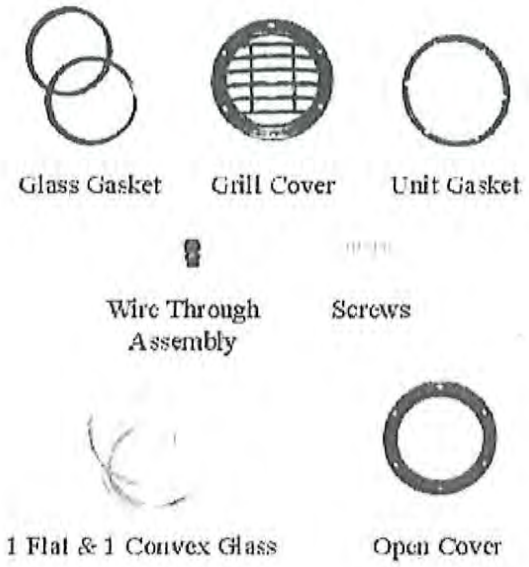

Warranty

Lifetime warranty against rust and corrosion.

Dimensions

Why Affordable Quality Lighting?

City of Sonoma
Design Review Commission
Agenda Item Summary

DRC Agenda Item:	**2**
Meeting Date:	**06/16/15**

Applicant	**Project Location**
First Congregational Church of Sonoma	252 West Spain Street

Historical Significance

- ☐ Listed on National Register of Historic Places, including Sonoma Plaza district (Significant)
- ☐ Listed on California Register of Historic Resources (Significant)
- ☐ Listed within Local Historic Resources Survey (Potentially Significant)
- ☐ Over 50 years old (Potentially Significant)

Request

Consideration of a revised sign program for a church (First Congregational Church of Sonoma).

Background

At the July 20, 2010, Design Review Commission (DRC) meeting, the DRC considered and continued a revised sign program for a church (First Congregational Church) and encouraged the applicant to resubmit the proposed freestanding signs with a height no higher than six feet. On August 18, 2010, the DRC approved a new sign program for a church consisting of the following:

- 1 each 80.7 square foot two-sided freestanding sign (not to exceed a height of 80”).
- 1 each 27.4 square foot freestanding sign (not to exceed a height of 86”).
- 3 each wall signs: 11 square foot total.

Summary

At this time the applicant is proposing to modify the existing sign face to feature a custom designed internally illuminated LED reader board sign. The reader board material is composed of aluminum, acrylic, finished with durable architectural paints, bronze in color. The text will feature 4 inch high changeable letters. The applicant has indicated that the sign is proposed to be illuminated internally with LEDs. The applicant is proposing to illuminate the sign from sundown to 10 p.m. Normal business hours are from 10 a.m. to 9 p.m.

Basic Findings: In order to approve any application for sign review, the review authority must make all of the following findings:

1. The proposed signage complies with applicable policies and regulations, as set forth in this sign ordinance (except for approved variances), all other city ordinances, and the general plan;

2. On balance, the proposed signage is consistent with the purpose and intent expressed by SMC 18.04.010 and the applicable guidelines for signs set forth by SMC 18.60.010, Appendix A – Design guidelines for signs; and,

3. The proposed signage is harmonious and consistent overall with the location of the site, including adjacent and surrounding development and its environmental features.

Other permits required: In addition to the requirements of this title, all signs and building improvements shall be in conformance with applicable requirements of the 2013 California Building Code and where required by the 2013 California Building Code, shall obtain a building permit prior to installation.

Commission Discussion

Architectural Review Commission Action

❑ Approved ❑ Disapproved ❑ Referred to: _____ ❑ Continued to: _____

Roll Call Vote: _____ Aye _____ Nay _____ Abstain _____ Absent

ARC Conditions or Modifications

Attachments

1. *Sign drawings*

cc: First Congregational Church of Sonoma
252 West Spain Street
Sonoma, CA 95476

Robert Sanders, via email

Mary Martinez, via will call at City Hall

Linda Aguilar, via email

Patricia Cullinan, via email

Alice Duffee, via email

SLHP Historic Survey, via email

First Congregational Church of Sonoma Sonoma,CA 252 W. Spain St, Sonoma, CA 95476 (707) 996-1328 Contact: Lynn Ross

robert sanders & co.
environmental graphic design
fabrication • installation
707 326-5851
robsand@vom.com
robertsanders.com

New Reader Board Added to Existing Monument Sign

Site location

Existing sign

Proposed Reader Board Design

5′-0″w

4′-0″h

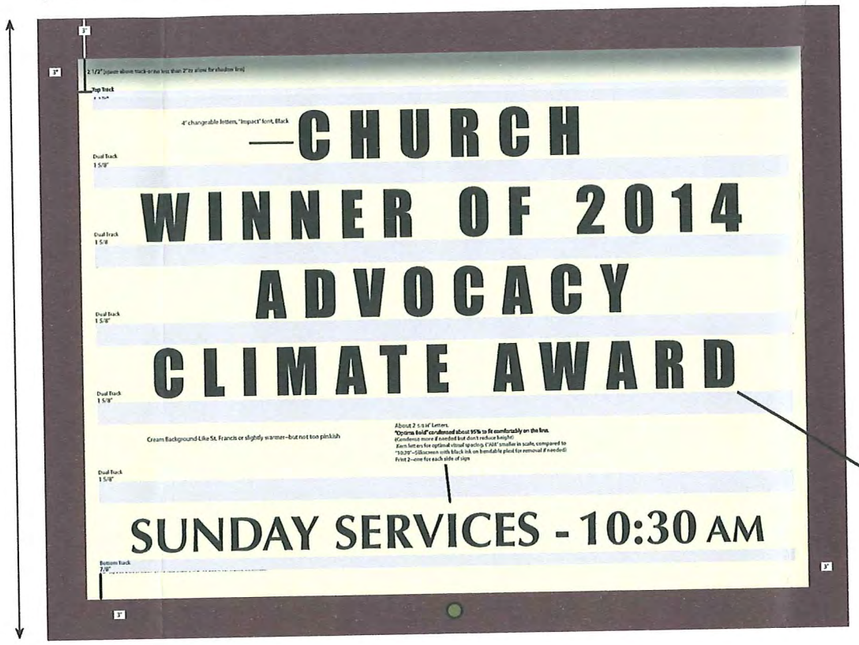

4" high changeable letters

Sign Features/Details:

- Custom designed internally illuminated LED reader board sign attached to existing church monument sign structure
- Double-faced sign perpendicular to street east and west facing in existing landscape area 7′ setback(existing sign)
- Reader board for church made of aluminum, acrylic, finished with durable architectural paints, bronze color
- Reader board with 4"high changeable letters, background cream acrylic face with heavy duty door and lock, internal backlit illumination with low energy LED's connected to existing electrical circuit.

Net area of new sign 4′ x 5′ = 20 s.f.
Net area of existing sign 4′ x 5′ = 20 s.f.

MAY 19 2015

City of Sonoma
Design Review and Historic Preservation Commission
Agenda Item Summary

DRHPC Agenda Item:	**3**
Meeting Date:	**06/16/15**

Applicant	**Project Location**
Altus Equity Group LP	405 Fifth Street West

Historical Significance

- ☐ Listed on National Register of Historic Places, including Sonoma Plaza district (Significant)
- ☐ Listed on California Register of Historic Resources (Significant)
- ☐ Listed within Local Historic Resources Survey (Potentially Significant)
- ☐ Over 50 years old (Potentially Significant)

Request

Continued consideration of exterior colors and materials for a 7-unit Planned Unit Development (Fifth Street West Homes) located at 405 Fifth Street West.

Summary

Site Characteristics: The site is a 0.5-acre corner lot located at the intersection of Fifth Street West and West Spain Street. The property is currently developed with a single-family home constructed in 1930 and two small outbuildings. The frontage on West Spain Street is improved with a monolithic curb, gutter, and sidewalk. The Fifth Street West frontage of the property is unimproved. Access to the property is currently provided by two driveways, one on West Spain Street and one on Fifth Street West.

Background: On December 15, 2009, the Design Review Commission approved the demolition of the single-family home and detached garage located on the property finding that it is not historically significant. On February 12, 2015, the Planning Commission approved a 7-unit planned development, including, a Tentative Map, and a Use Permit. As approved, the project site will be subdivided into 7 lots ranging from 1,472 sq. ft. and 1,561 sq. ft. plus a common area parcel of 10,548 sq. ft. The Planned Development will be composed of a single structure oriented toward West Spain Street with seven attached, zero-lot line townhomes. Three unit types are proposed, all with two floors except for the corner unit which is one-story (Home Type C). Living areas for the units are 1,252 sq. ft. for Home Type A, 1,103 sq. ft. for Home Type B, and 878 sq. ft. for Home Type C. Access to the development will be provided by a two-way driveway on Fifth Street West. On April 21, 2015, the Design Review and Historic Preservation Commission (DRHPC) approved building elevations, exterior colors, materials, lighting, and landscaping for the project with the condition that the applicant return to the DRHPC with additional color options (including rendered color samples) (see attached DRHPC approval letter).

The project is now before At this time the applicant has returned to the DRHPC for continued review of the exterior colors and materials.

Exterior Colors: At this time the applicant has put forward two new alternate exterior color schemes: Scheme #2; and, Scheme #3.
Scheme #2 consists of Benjamin Moore Nantucket Gray (HC-111) for the main body, plywood, and battens); 2) Benjamin Moore Lemon Chiffon (OC-109) for the gutters and eaves, window and door trim, garage doors, fascia boards, and gable brackets and trim; 3) Benjamin Moore Middlebury Brown (HC-68) for the front doors, gate boards, wood shutters, and wood posts; and, 4) Benjamin Moore Tate Olive (HC-112) for the gable vent vertical boards, gate trim, , wood board and batten walls.
Scheme #3 consists of Benjamin Moore KINGSPORT GRAY (HC-86) for the main body, plywood, and battens; 2) Benjamin Moore Lemon Chiffon (OC-109) for the gutters and eaves, window and door trim, fascia boards, and gable brackets and trim; 3) Benjamin Moore Smoldering Red (2007-10) for the front doors and wood shutters; and, 4) Benjamin Moore Fairview Taupe (HC-85) for the gable vent, gable vent vertical boards, gate, wood board and batten walls, wood posts, and garage doors.

Exterior Materials: At the April 21, 2015 DRHPC meeting, Comm. Anderson questioned the use of the spacing of the cedar battens of the resawn plywood siding. In response to the question the applicant has decreased the spacing of the 1x3 cedar battens from 24 inches on center to 16 inches on center see Color Elevation and Color Key elevations for two new exterior color schemes).

Findings for Project Approval: The Design Review and Historic Preservation Commission may approve an application for architectural review, provided that the following findings can be made (§19.54.080.G):

1. The project complies with applicable policies and regulations, as set forth in this Development Code, other City ordinances, and the General Plan.
2. On balance, the project is consistent with the intent of applicable design guidelines set forth in the Development Code.
3. The project responds appropriately to the context of adjacent development, as well as existing site conditions and environmental features.

Other permits required: In addition to the requirements of this title, the project shall be in conformance with applicable requirements of the 2013 California Building Code and where required by the 2013 California Building Code, shall obtain a building permit prior to installation.

Commission Discussion

Design Review and Historic Preservation Commission Action

❑ Approved ❑ Disapproved ❑ Referred to: _____ ❑ Continued to: _____

Roll Call Vote: _____ Aye _____ Nay _____ Abstain _____ Absent

DRHPC Conditions or Modifications

Attachments:

1. DRHPC approval letter
2. Project Narrative
3. Color Submittal Scheme 2
4. Color Submittal Scheme 3
5. Color Key Scheme 2
6. Color Key Scheme 3
7. Color Elevation Schemes #2 and #3

cc: Altus Equity Group LP
P.O. Box 6787
Santa Rosa, CA 95406

Tierney/Figueiredo
817 Russel Ave. Suite H
Santa Rosa, CA 95403

City of Sonoma

No. 1 The Plaza
Sonoma, California 95476-6618
Phone (707) 938-3681 Fax (707) 938-8775
E-Mail: cityhall@sonomacity.org

Sonoma Sister Cities:
Aswan Egypt
Chambolle-Musigny France
Greve Italy
Kaniv Ukraine
Patzcuaro Mexico
Penglai China
Tokaj Hungary

April 22, 2015

Altus Equity Group LP
Attn: Forrest Jinks
P.O. Box 6787
Santa Rosa, CA 95406

Subject: Consideration of building elevations, exterior colors, materials, lighting, and landscaping for a 7-unit Planned Unit Development (Fifth Street West Homes) located at 405 Fifth Street West (APN 127-22-1007).

Dear Mr. Jinks:

On Tuesday, April 21, 2015, the Design Review and Historic Preservation Commission (DRHPC) considered building elevations, exterior colors, materials, lighting, and landscaping for a 7-unit Planned Unit Development (Fifth Street West Homes) located at 405 Fifth Street West. After discussion and public testimony, the DRHPC voted 5-0 to approve the application as submitted with the condition that the applicant return to the DRHPC with additional color options (including rendered color samples). The submittal date for the June 16, 2015 DRHPC meeting is May 19, 2015

All building improvements shall be in conformance with applicable requirements of the 2013 California Building Code and where required by the 2013 California Building Code, shall obtain a building permit prior to installation.

If you have any questions about this matter, please do not hesitate to call.

Sincerely,

Wendy Atkins

Wendy Atkins
Associate Planner

cc: Tierney/Figueiredo
817 Russel Ave. Suite H
Santa Rosa, CA 95403

PROJECT NARRATIVE

RECEIVED

MAY 22 2015

CITY OF SONOMA

Fifth Street West Homes

405 5th St West, Sonoma CA

May 22, 2015

APN: 127-221-007

Location: The south west corner of 5th St West and West Spain St

Size: Approximately 0.49 acres

Current Zoning: Commercial, Northwest Planning Area

Project Overview: While there was a previous approval for a mixed use retail/office building for this site, we are proposing a residential ownership project which we believes both fills a need for housing in Sonoma, decreases traffic impact as compared to the originally proposed commercial project and works as a transition between the commercial development to the south and the single-family residential neighborhoods to the north. The zoning allows for up to 20 units per acre which would allow a maximum of 9 units on this site. Due to the various site and zoning constraints on the property, such as the setbacks from each of the two streets that border the property and the "fixed" location of the project driveway, we believe 7 units on the property is an appropriate density that will appeal to the end user and the City.

The design meets all the design criteria as defined by the site's zoning. The Planned Development designation was requested to allow the smaller lots required to provide each of the 7 townhomes their own individual properties. This project was approved by the Planning Commission as a Planned Development project in accordance with City of Sonoma Ordinance 19.54.070 Planned Development Permit.

The design as conceptually proposed consists of six two-bedroom two-bath townhomes and one one-bedroom one-bath townhome in an attached row house style of development. One of the seven will be designated as a moderate income inclusionary unit. Each unit will have one covered parking space with the remainder of the required parking being shared in a paved parking lot located at the rear of the site. The "public" façade of the project is oriented toward the streets and the garages and open parking are located behind the building. Generous landscaping, including low-water usage native grasses and shrubs provide a background to 24 and 36 inch "box" trees, including cork oaks and olive trees.

Outdoor patio spaces for the homes are provided alternately by fenced front yard patios and enclosed courtyards located between the homes and their garages. Garages are accessed either from these courtyards or directly from the homes.

The elevations provide a mixture of traditional gable forms; those along West Spain Street are set back deeply from the front façade and are separated by long sloping shed roofs that create vaulted ceilings in the living rooms. The rear (south) elevations also have a variety of gable forms that vary greatly in their distance from the rear garage facades and are further broken down in scale by the voids created by the three rear patio courtyards.

The primary building body colors are intentionally muted and pale to reduce the building's visual impact on the street. The front patio wall and accent features have two shades of olive/sage green to compliment the landscape palette.

The current design includes revisions based on comments provided by the Planning Commission. These revisions include:

1. Reduced massing as viewed from the intersection of 5th St West and W Spain
2. Increased variation in the northern elevation and reduction in scale and orientation of gable roof elements
3. Internal courtyards on three of the units to increase usability and size of yard space and provide more variation in building massing
4. Redesign of eastern elevation to provide a single story scale at the intersection
5. Orientating the easterly units entry onto Fifth Street West
6. Ensuring all units have a location on the floor plans for a washer and dryer
7. Change of siding material from horizontal lap siding to plywood-and-batten siding for increased aesthetic appeal
8. Wrapping the patio wall of the eastern most unit (7C) to further break up the eastern elevation

Project Design/Color Revisions Based on April 21, 2015 Design Review and Historic Preservation Commission Meeting Comments:

1. Spacing of the 1x3 cedar battens on the resawn plywood siding has been decreased from 24 inches on center to 16 inches on center (see Color Elevation and Color Key elevations for two new exterior color schemes).
2. As requested by the DRHPC two new alternate exterior color schemes are being submitted for review:
   a. Scheme #2 has the light sage "Nantucket Gray" color from the original color scheme as the body color. Door and window trim is off-white "Lemon Chiffon" and the patio fencing is dark sage "Tate Olive"; both these colors were used in different locations on the original color scheme presented on April 21. Patio wall posts, entry doors and shutters are deep brown "Middlebury Brown".
   b. Scheme #3 has gray-brown "Kingsport Gray" as the body color. Door and window trim is off-white "Lemon Chiffon" and the patio fencing and posts are "Fairview Taupe". Entry doors and shutters are deep red "Smoldering Red".

COLOR SUBMITTAL - SCHEME 2

FIFTH STREET WEST HOMES
405 FIFTH STREET WEST, SONOMA, CA
05/22/2015

1

BENJAMIN MOORE COLOR PREVIEW
COLOR: #HC - 111 "NANTUCKET GRAY"

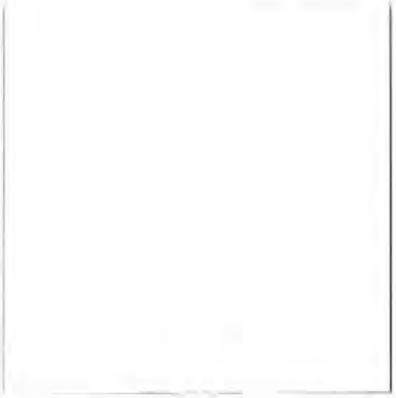

2

BENJAMIN MOORE COLOR PREVIEW
COLOR: #OC - 109 "LEMON CHIFFON"

3

BENJAMIN MOORE COLOR PREVIEW
COLOR: #HC - 68 "MIDDLEBURY BROWN"

4

BENJAMIN MOORE COLOR PREVIEW
COLOR: #HC - 112 "TATE OLIVE"

5

COMPOSITION ROOF SHINGLES
PABCO PREMIER RADIANCE 50
COLOR: "PEBBLE"

MAY 20 2015

COLOR SUBMITTAL - SCHEME 3

FIFTH STREET WEST HOMES
405 FIFTH STREET WEST, SONOMA, CA
05/22/2015

1

BENJAMIN MOORE COLOR PREVIEW
COLOR: #HC - 86 "KINGSPORT GRAY"

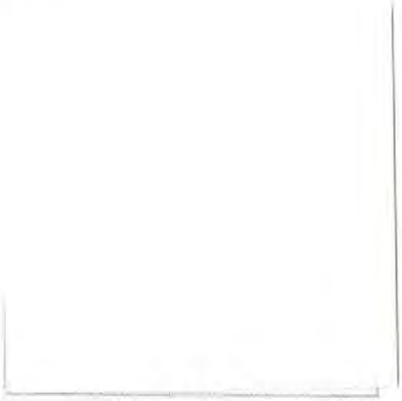

2

BENJAMIN MOORE COLOR PREVIEW
COLOR: #OC - 109 "LEMON CHIFFON"

3

BENJAMIN MOORE COLOR PREVIEW
COLOR: 2007-10 "SMOLDERING RED"

4

BENJAMIN MOORE COLOR PREVIEW
COLOR: #HC - 85 "FAIRVIEW TAUPE"

5

COMPOSITION ROOF SHINGLES
PABCO PREMIER RADIANCE 50
COLOR: "PEBBLE"

MAY 2 0 2015

NORTH - WEST SPAIN STREET

EAST - FIFTH STREET WEST

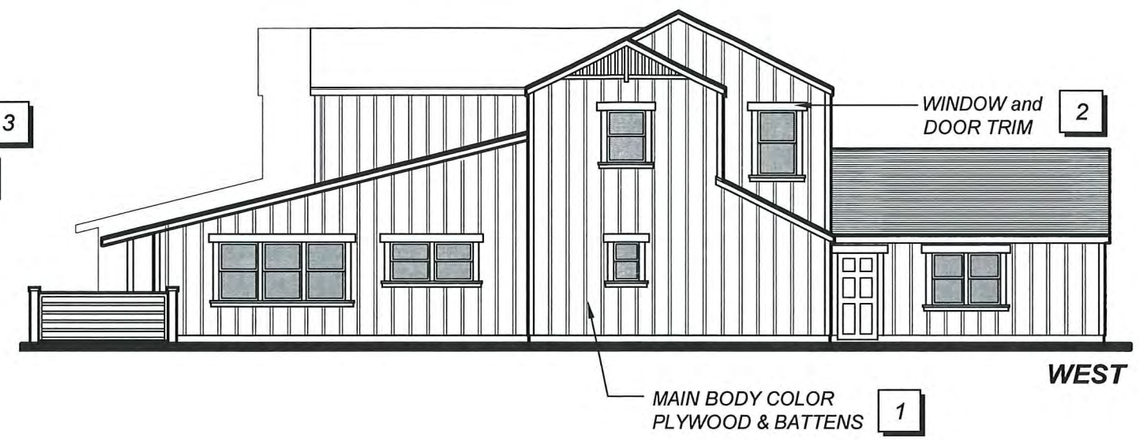

WEST

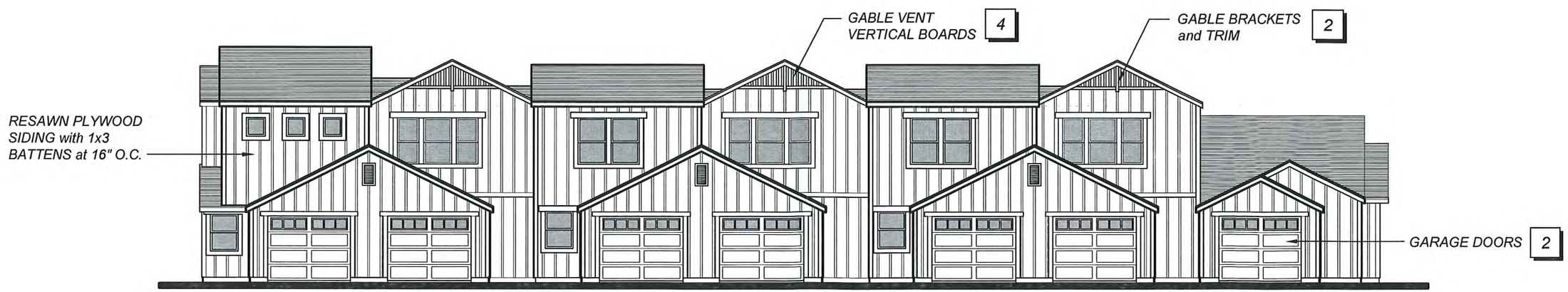

SOUTH

FIFTH STREET WEST HOMES

405 FIFTH STREET WEST, SONOMA, CALIFORNIA

COLOR KEY
Scheme #2

TIERNEY/FIGUEIREDO
817 RUSSELL AVE. SUITE H, SANTA ROSA, CA 95403
(707) 576-1557 (707) 576-1555 FAX TFA@SONIC.NET
ARCHITECTS AIA

05/22/15
#1413

MAY 20 2015

NORTH - WEST SPAIN STREET

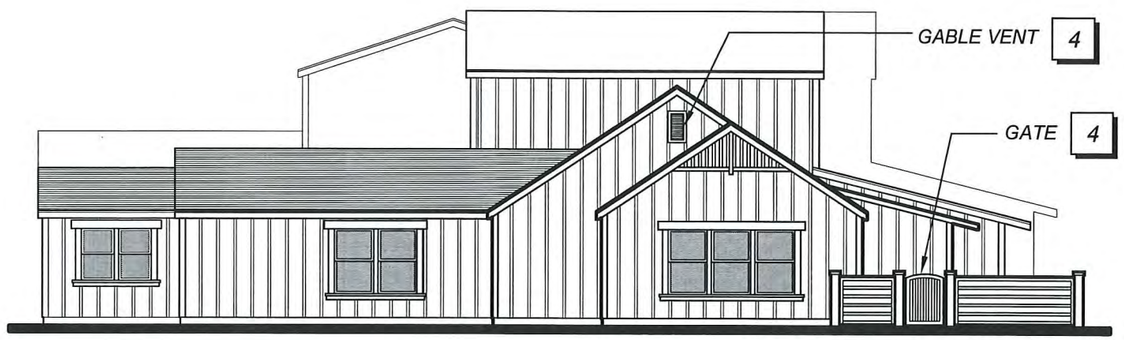

EAST - FIFTH STREET WEST

WEST

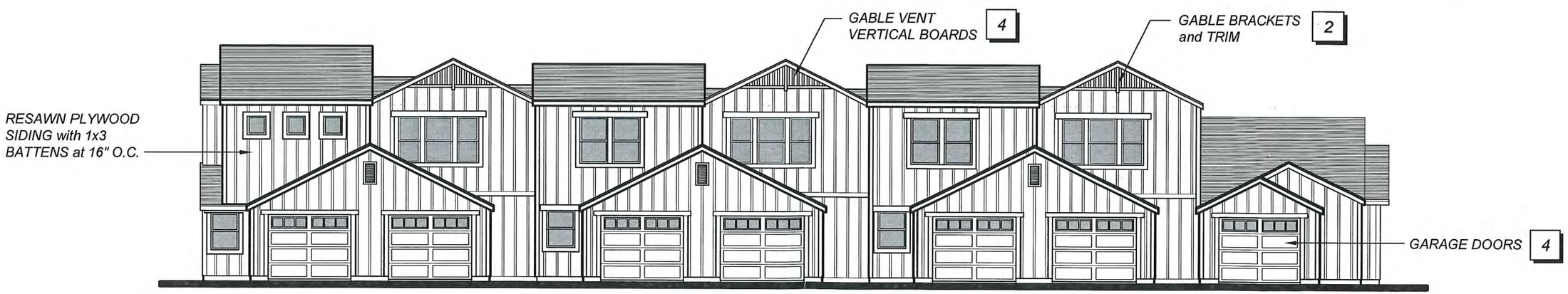

SOUTH

FIFTH STREET WEST HOMES

405 FIFTH STREET WEST, SONOMA, CALIFORNIA

COLOR KEY
Scheme #3

TIERNEY/FIGUEIREDO
817 RUSSELL AVE. SUITE H, SANTA ROSA, CA 95403
(707) 576-1557 (707) 576-1555 FAX TFA@SONIC.NET
ARCHITECTS AIA

05/22/15
#1413

MAY 20 2015

NORTH - WEST SPAIN STREET

SCHEME #2

NORTH - WEST SPAIN STREET

SCHEME #3

FIFTH STREET WEST HOMES

405 FIFTH STREET WEST, SONOMA, CALIFORNIA

COLOR ELEVATION
Schemes #2 and #3

TIERNEY/FIGUEIREDO
817 RUSSELL AVE. SUITE H, SANTA ROSA, CA 95403
(707) 576-1557 (707) 576-1555 FAX TFA@SONIC.NET
ARCHITECTS AIA

05/22/15
#1413

MAY 20 2015

City of Sonoma
Design Review and Historic Preservation Commission
Agenda Item Summary

DRHPC Agenda Item:	**4**
Meeting Date:	**06/16/15**

Applicant	**Project Location**
Sweet Scoops Homemade Ice Cream	408 First Street East

Historical Significance

☒ Listed on National Register of Historic Places, including Sonoma Plaza district
☒ Listed on California Register of Historic Resources
☒ Listed within Local Historic Resources Survey (Potentially Significant)
☒ Over 50 years old (See notes)

NOTES: The structure, referred to as the Pinelli building lies within the Sonoma Plaza National Register Historic District, and is designated as a National Register Contributing Building. The building was constructed in 1891 and is described as a vernacular one-story building. Architectural details on the front façade include a leaded glass transom over the entrance along with a metal eyebrow cornice and dentils.

Request

Consideration of new paints colors for a commercial building (Sweet Scoops Homemade Ice Cream).

Summary

The applicant is proposing to change the color of the front portion of the building. The applicants have stated that the new paint colors are consistent with the branding of the business. The applicants have brought forward four exterior paint options for the building: 1) paint door and lower paneling (under window) Behr glass tile (M400-2) and the molding (over the leaded glass transom), downspout, window casing to be painted Kelly Moore Whitest White (KMW43) (the applicant will bring manufacturer color samples to the DRHPC meeting); 2) all existing painted area painted Behr glass tile (MA400-2), including the molding above the leaded glass transom; 3) all current pink painted area to be painted Behr glass tile (M400-2), including the molding above the leaded glass transom, and the white painted area to remain white; and, 4) all current pink painted area to be painted Behr ice rink (M430-2), white painted area to remain white, and the molding above the leaded glass transom to be painted Kelly Moore Whitest White (KMW43).

Findings for Project Approval: For projects within the Historic Overlay zone or a Local Historic District and projects involving historically significant resources, the Design Review and Historic Preservation Commission may approve an application for architectural review, provided that the following findings can be made (§19.54.080.G):

1. The project complies with applicable policies and regulations, as set forth in this Development Code, other City ordinances, and the General Plan.
2. On balance, the project is consistent with the intent of applicable design guidelines set forth in the Development Code.
3. The project responds appropriately to the context of adjacent development, as well as existing site conditions and environmental features.
4. The project will not impair the historic character of its surroundings.
5. The project substantially preserves the qualities of any significant historic structures or other significant historic features on the site.
6. The project substantially complies with the applicable guidelines set forth in Chapter 19.42 (Historic preservation and infill in the Historic Zone).
7. The project substantially complies with any applicable preservation plan or other guidelines or requirements pertaining to a local historic district as designated through section 19.42.020.
8. The project substantially complies with the applicable Secretary of Interior Standards and Guidelines for the Treatment of Historic Properties.

An Encroachment Permit shall be required for all work performed in the public right-of-way. Please contact Lisa Sevilla at (707) 933-2205 for information regarding City Encroachment Permits.

Commission Discussion

Design Review and Historic Preservation Commission Action

❑ Approved ❑ Disapproved ❑ Referred to: _____ ❑ Continued to: _____

Roll Call Vote: _____ Aye _____ Nay _____ Abstain _____ Absent

DRHPC Conditions or Modifications

Attachments

1. *Project narrative*
2. *Sign drawing*
2. *Paint color samples*
3. *Picture of current exterior*
4. *Exterior paint examples*

cc: Sweet Scoops Homemade Ice Cream
408 First Street East
Sonoma, CA 95476

Mary Martinez, via will call at City Hall

Linda Aguilar, via email

Patricia Cullinan, via email

Alice Duffee, via email

SLHP Historic Survey, via email

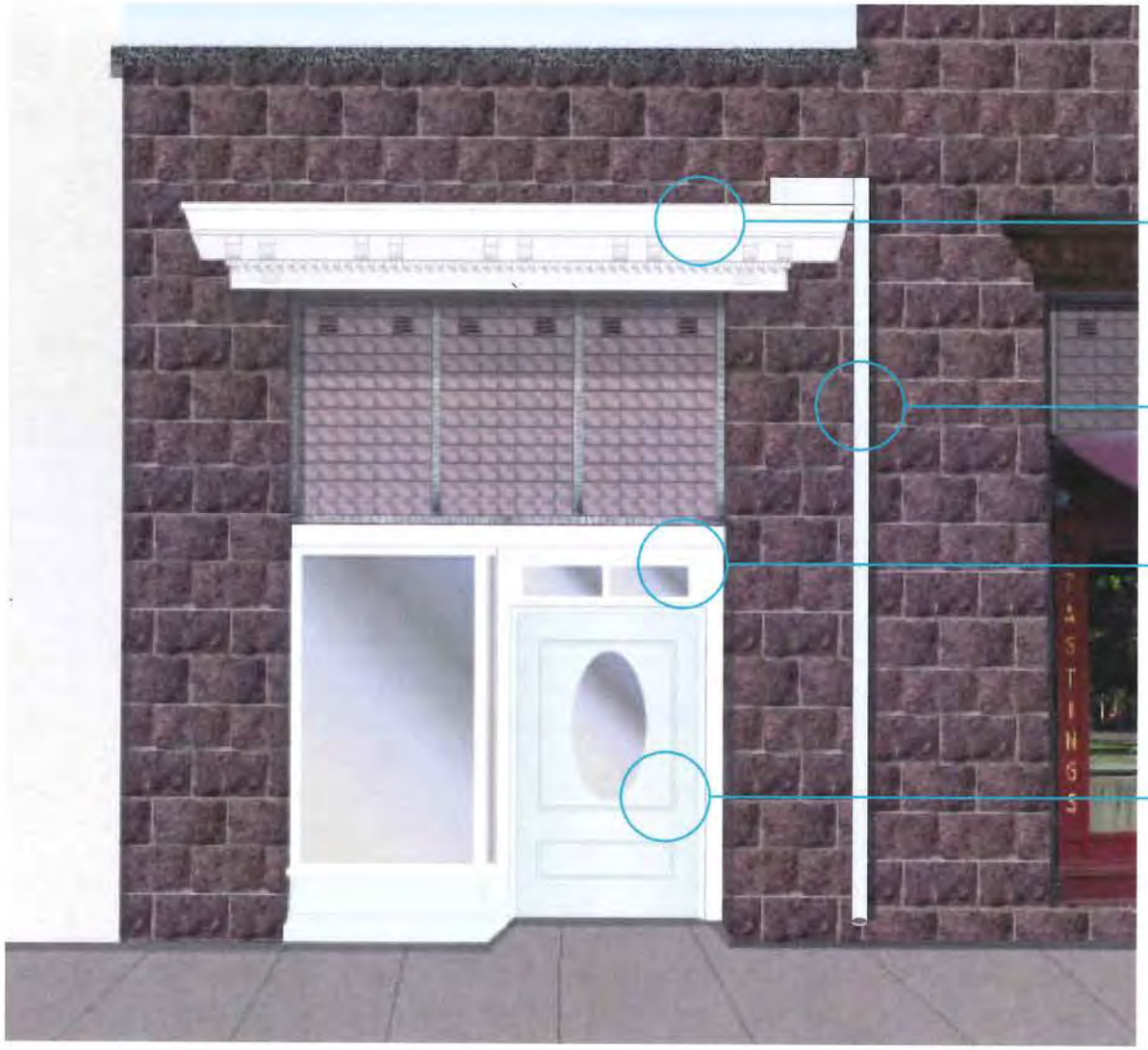

PAINT MOLDING GLOSS WHITE

PROVIDES BACKGROUND CONTRAST
WITH TREE, VISUALLY INCREASING SIZE
OF STOREFRONT

PAINT DOWNSPOUT "MINT"

CREATES A VISUAL EXTENSION OF STOREFRONT
UNIFIES FACADE

PAINT WINDOW CASING GLOSS WHITE

GLOSS WHITE CREATES A BRIDGE
BETWEEN THE MINT COLOR AND THE BUILDING
WHILE TYING IN THE UPPER MOLDING

PAINT DOOR AND LOWER PANELING "MINT"

MINT IS A RELATIVELY COOL COLOR,
AGAINST THE EARTHY STONE
TOO MUCH OF THIS COLOR MAY
MAKE THE FACADE FEEL TOO COOL

PROJECT NARRATIVE

Grandma Linda's Purchase

On April 30, 2015, Grandma' Linda's Ice Cream will purchased by Ramie and Joe Hencmann. The Hencmann's will be rebranding to Sweet Scoops Homemade Ice Cream. Sweet Scoops will offer homemade ice cream made onsite.

Goals

Our rebranding goals include updating the exterior colors to increase traffic, identify the shop as an ice cream shop, and to foster the theme of whimsical sophistication.

Solution

The rebranding includes interior and exterior updating - all to fall within the below shown color palate.

SEAFOAM	TURQUOISE	MILK	MINT	BRASS	PEACH

The soft colors elicit thoughts of comfort and the joy of ice cream, as well as identifying Sweet Scoops as a sophisticated, yet whimsical spot for a cool treat.

The location at 408 1st St E is an optimal location for foot traffic. There is decreased visibility from the plaza, however, due to the tree directly in front. The proposed color updates will pop against the historic stone walls while maintaining a classic feel. The colors proposed are also soft and sophisticated and will promote brand identity.

Project Outline

- Awning & Signage: To be proposed by Sonoma Signs at a different time
- Exterior Paint Options

  2 ~~1~~. All painted Behr Glass Tile M400-2
  3 ~~2~~. All current pink to be painted Behr Glass Tile M400-2. White to remain white.
  4 ~~3~~. All current pink to be painted Behr Ice Rink M430-2. White to remain white.

See attached Exterior Paint Options Examples for paint samples.

- Outdoor Tables & Chairs: Tables and chairs will be white to coincide with style and theme.

Sweet Scoops

HOMEMADE ICE CREAM

Project Proposal

Prepared for: Design Review and Historic Preservation Commission, City of Sonoma

Prepared by: Ramie Hencmann, Sweet Scoops Co-Owner

April 19, 2015

APR 21 2015

PROPOSED COLOR OPTIONS

Glass Tile M400-2[U]

Ice Rink M430-2[U]

CURRENT EXTERIOR

Exterior Paint Options

1. All painted Behr Glass Tile M400-2
2. All current pink to be painted Behr Glass Tile M400-2. White to remain white.
3. All current pink to be painted Behr Ice Rink M430-2. White to remain white.

EXTERIOR PAINT EXAMPLES

MINT - our proposed Glass Tile

SEAFOAM - our proposed Ice Rink

City of Sonoma
Design Review and Historic Preservation Commission
Agenda Item Summary

DRHPC Agenda Item:	**5**
Meeting Date:	**06/16/15**

Applicant	**Project Location**
Strata/Bennett Martin	557 Fourth Street East

Historical Significance

☐ Listed on National Register of Historic Places, including Sonoma Plaza district (Significant)
☐ Listed on California Register of Historic Resources (Significant)
☐ Listed within Local Historic Resources Survey (Potentially Significant)
☒ Over 50 years old (Potentially Significant)
Year Built: 1951

Request

Demolition of a single-family residence located on the property at 557 Fourth Street East.

Summary

The property is a ±12,300 square acre parcel located on the west side of Fourth Street West midblock between East Napa Street and Patten Street. The site is currently developed with a single-family residence.

The property is located within the City's Historic Overlay Zone, but it is not listed on the local Historic Resources Survey, the State Register, or the National Register. However, under the Development Code, demolition of any structure over 50 years old is subject to review and approval by the DRHPC. A copy of the existing site plan (Demolition Plan) is attached.

Historical Significance: According to the State Office of Historic Preservation, structures over 50 years old *may* be historically significant, even if not listed on a local or State/National register. Pursuant to §15064.5 of the California Environmental Quality Act (CEQA), a resource is considered "historically significant" if the resource meets any one of the following criteria for listing on the California Register of Historical Resources (as set forth under Public Resource Code §5024.1):

1. Is associated with events that have made a significant contribution to the broad patterns of California's history and cultural heritage.

2. Is associated with the lives of persons important in our past.

3. Embodies the distinctive characteristics of a type, period, region, or method of construction, or represents the work of an important creative individual, or possesses high artistic values.

4. Has yielded, or may be likely to yield, information important in prehistory or history.

Given the age of the building, in May, 2015, the applicant commissioned Brunzell Historical to prepare a historical evaluation of the property to determine if the residence was historically significant. The historic resource evaluation found that the property does not meet the criteria for listing on the California Register of Historical Resources and therefore is not a historical resource as defined under CEQA (see attached Historical Evaluation of the building 557 Fourth Street East in Sonoma, Sonoma County, California dated May 19, 2015). Because the structure is not a historical resource, demolishing it would not have a significant effect on the environment and the project qualifies for a Class 1 Categorical Exemption under CEQA (§15301. Existing Facilities).

City Regulations for Demolition Permits: The City's regulations for demolition permits rely heavily on the criteria for listing on the California Register of Historical Resources in determining whether a property is historically significant and can be demolished. This is reflected in both §19.54.090.F.2 (Determination of Significance) and §19.54.090.G.1 (Findings, Decision) of the Development Code. Based on the analysis above - that the residence does not qualify as a historic resource

under CEQA - it is staff's view that the findings for approval of a demolition permit can be made. If the DRHPC chooses to approve the demolition of the residence, the DRHPC may require that the single-family residence not be demolished until building permits for the replacement structure have been issued and that the inside and outside of the residence be photo documented and submitted to the Sonoma League for Historic Preservation and City of Sonoma.

Required Findings: As set forth in §19.54.090 of the Development Code, the DRHPC must make the following findings to approve a Demolition Permit:

1. The structure is not historically significant, based upon the criteria established by the State Office of Historic Preservation (listed above); or
2. The structure does not represent a unique and irreplaceable historic or architectural resource;
3. The community benefit of preserving the structure is outweighed by the cost of preservation and rehabilitation;
4. The adaptive re-use of the structure is infeasible or inappropriate, due to economic considerations, structural conditions or land use incompatibility; and
5. The relocation of the structure is infeasible due to cost, structural conditions or lack of an interested taker.

All demolition projects require a demolition permit from the City of Sonoma Building Department prior to performing any demolition work. Additional clearances from the Bay Area Air Quality Management District (hazardous materials 'J' number), Sonoma County PRMD (sewer disconnect permit), Sonoma County Health Department (well abandonment permit), Sonoma Planning Department (tree protection and storm water management best practices), and other agencies or departments may be required prior to issuance of a demolition permit. For further information, please contact the Building Department at (707) 938-3681.

If commissioners wish to arrange a site visit to inspect the home independently, please contact property owner, Marty Herrick, at 707-481-6522 or Chelsea Hamada, at 707-935-7944.

Commission Discussion

Design Review and Historic Preservation Commission Action

❑ Approved ❑ Disapproved ❑ Referred to: _____ ❑ Continued to: _____

Roll Call Vote: _____ Aye _____ Nay _____ Abstain _____ Absent

DRHPC Conditions or Modifications

Attachments:
1. Existing site plan
2. Historical Evaluation of the building 557 Fourth Street East in Sonoma, Sonoma County, California

cc: STRATA (Bennett Martin), via email

Martin and Alicia Herrick
152 El Ritero
Sonoma, CA 95476-1324

Mary Martinez, via will call at City hall

Patricia Cullinan, via email

Alice Duffee, via email

SLHP Historic Survey

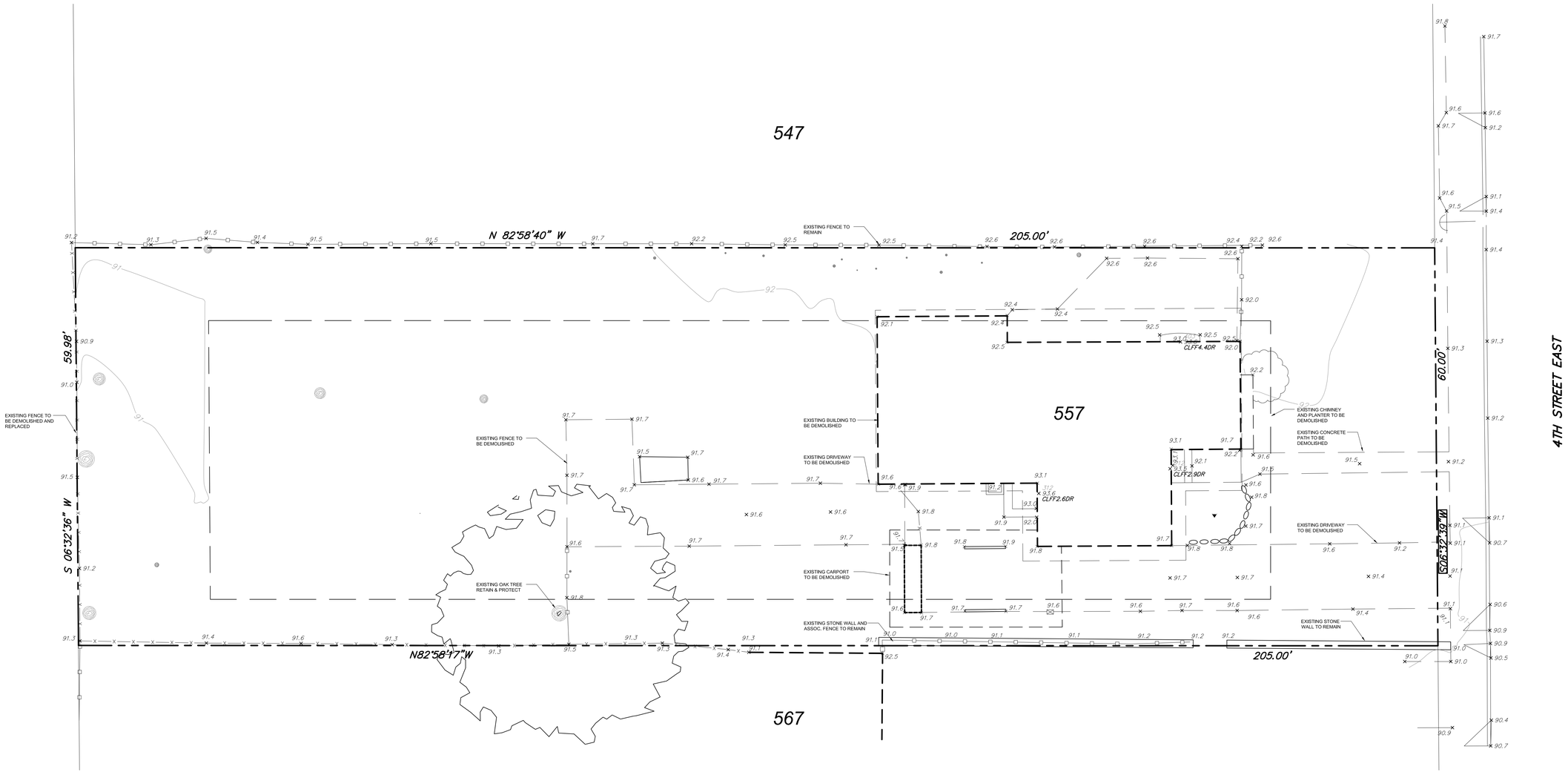

1 DEMOLITION PLAN

1/8" = 1'-0"

STRATA AIP
STRATEGIC DESIGN STUDIO

ARCHITECTURE

PO Box 1207
Sonoma, California 95476
T 707.935.7944
F 707.935.6618
www.STRATAap.com

LOCATION

557 FOURTH STREET EAST
SONOMA, CA 95476

REVISIONS

1 -- --
2 -- --
3 -- --
4 -- --

HERRICK RESIDENCE
APN #: 018-271-016-000

SCHEMATIC DESIGN

SHEET TITLE

DEMOLITION PLAN

CHECKED BY: BJ

DRAWN BY: cMh

SCALE: 1/8" = 1'-0"

DATE: May 19, 2015

PROJECT NO. 192-15

A1.02

DRAWING NO.

BRUNZELL
HISTORICAL

May 19, 2015

Bennett Martin
STRATAAP, Inc.
23562A Arnold Drive
Sonoma, CA 95476

Subject: Historical Evaluation of the building 557 Fourth Street East in Sonoma, Sonoma County, California.

Dear Bennett,

The letter report that follows, along with the DPR 523 form included with it, comprise the evaluation of the property at 557 4th Street East in Sonoma, as required by the City of Sonoma Planning Department.

Methodology
Kara Brunzell conducted a site visit on April 27, 2015. The site visit included collecting photographs of the front and rear of the building, the parcel, and the neighborhood setting. Kara Brunzell conducted a record search of the subject property at the Northwest Information Center (NWIC), located at California State University, Sonoma, deed research at the Sonoma County Recorder's office, and online research at ancestry.com and other websites. In addition, she conducted research through the Sonoma League of Historic Preservation and the Depot Museum of Sonoma.

Summary of Findings
The record search at the NWIC did not reveal any previous surveys of the parcel, nor were previous studies found in the archives of the local historical organizations. Although it does not appear to have been previously evaluated, the property is located in the City of Sonoma's Historic Zone, where potential projects trigger a requirement for historical evaluation.

Because this work was completed pursuant to CEQA, all resources discovered during the field survey require evaluation for California Register of Historical Resources (CRHR). Since the property is located within the City of Sonoma, CRHR eligibility evaluation will be completed per Sonoma Municipal Code Chapter 19.42. The property was also evaluated for National Register of Historic Places (NRHP) eligibility.

National Register of Historic Places

In conjunction with the following NRHP criteria, sites must be assessed for integrity of location, design, setting, materials, workmanship, feeling, and association. A site may be considered eligible to the NRHP if it retains sufficient integrity of the elements listed above and it:

(a) is associated with events that have made a significant contribution to the broad patterns of our history;

(b) is associated with the lives of persons significant in our past;

(c) embodies the distinctive characteristics of a type, period, or method of construction, represents the work of a master, possesses high artistic values, or represents a significant or distinguishable entity whose components may lack individual distinction;

(d) yields, or may be likely to yield, information important to the prehistory or history of the area/region.

MAY 19 2015

landmark examples of the style. Although it is an interesting small example of Contemporary architecture, the house does not rise to the level of significance required for listing on the NHRP, CRHR, or the City of Sonoma historic register under Criterion C/3.

Criterion D/4: In rare instances, buildings themselves can serve as sources of important information about historic construction materials or technologies and be significant under Criterion D/4. 557 Fourth Street East does not appear to be a principal source of important information in this regard.

Because of its lack of significance under any NRHP, CRHR, or City of Sonoma criteria, the house is not eligible for listing on any historic register, and therefore does not qualify as a historic resource under CEQA.

Recommendations

Although the building fails to rise to the level of significance required for historic listing, it is a well-preserved if modest example of a Contemporary-style house. The style is relatively unusual in Sonoma, and demolition should be avoided if possible. If demolition or substantial alteration is unavoidable, then measures may be undertaken to document the building. Local community groups interested in Sonoma history may advocate for photographic and documentary recordation of the house. If photographic and other documentation of the property are collected, these materials should be stored in local archives in order to preserve information about the building.

Preparer's Qualifications

Kara Brunzell holds a Master's degree in Public History and has worked multiple facets of historic preservation and cultural resource evaluation since 2007. She is listed as a Historian and Architectural Historian on the California Office of Historic Preservation's roster of qualified consultants.

Please contact me by phone at 707/290-2918 or e-mail at kara.brunzell@yahoo.com with any questions or comments.

Sincerely,

Kara Brunzell, M.A.
Architectural Historian

*NRHP Status Code 6Z

*Resource Name or # (Assigned by recorder) 557 Fourth Street East, Sonoma

B1. Historic Name: None
B2. Common Name: None
B3. Original Use: Dwelling B4. Present Use: Dwelling
*B5. Architectural Style: Contemporary
*B6. Construction History: (Construction date, alteration, and date of alterations) Original construction, 1951;
Bathroom addition, 1967
Roof replacement, 1982

*B7. Moved? ☒ No ☐ Yes ☐ Unknown Date: _____ Original Location: _____
*B8. Related Features: _____
B9. Architect: Unknown b. Builder: Unknown
*B10. Significance: Theme Residential Architecture Area City of Sonoma
Period of Significance 1951 Property Type Dwelling Applicable Criteria C/3
(Discuss importance in terms of historical or architectural context as defined by theme, period, and geographic scope. Also address integrity.)

The dwelling, which is located within the City of Sonoma's historic overlay zone, does not meet the criteria for listing on the National Register of Historic Places (NRHP), the California Register of Historical Resources (CRHR), or as a City of Sonoma historic resource. The building is not significantly associated with Sonoma's history or with persons important to Sonoma's history, and is not architecturally significant (see continuation sheet).

B11. Additional Resource Attributes: (List attributes and codes)
*B12. References:
(See Footnotes)

B13. Remarks:

*B14. Evaluator: Kara Brunzell

*Date of Evaluation: April 27, 2015

(This space reserved for official comments.)

backwater were coming to an end. The 1960s and 1970s were an era of explosive growth in Sonoma's built environment, and by 1978, Sonoma had annexed 44 additions. The population had grown from 3,023 residents in 1960 to over 40,000 in 1980. As neighborhoods that had been partially rural were built out, wineries and other agriculture moved out into the nearby Valley of the Moon. Increased population allowed for business growth during this era, especially the wine business, which doubled in size.[6]

Property History

The parcel on which 557 Fourth Street East was constructed was part of the Sonoma Pueblo street grid as originally laid out by General Vallejo. Although only a few blocks east of Sonoma Plaza, the area was undeveloped and used primarily for agriculture for many decades. In 1915, Maria and Philip Picetti subdivided the area south of the intersection of East Napa Street and Fourth Street East. Most lots were a quarter acre or larger, and intended for suburban residential development. The Picetti family set up restrictive covenants, presumably to keep property values high in the neighborhood. They limited the neighborhood to residential development, regulated outbuildings, and required a minimum of 850 square feet per dwelling. As was common in the early twentieth century, the covenants also attempted to prevent residence by non-whites. There were scattered dwellings in the neighborhood prior to the subdivision, and as Picetti sold the lots over the decades Fourth Street East gradually took on a residential rather than rural character.[7]

The Picettis were local farmers of Italian origin. Philip (or Fillipo) Picetti was born in 1860, and was brought to the United States as an infant. Maria (or Mary) Figone was born in 1869, and emigrated as a young adult in 1887. The couple's five children were all born in California. The three eldest, John, Louis, and Virginia, in the early 1890s. Sylvia was born about 1902, and Mary about 1914. By 1910, the family was living in the eastern part of Sonoma on land they had purchased from the Breitenbach family. Their farm was on Old Napa Road.[8]

Based on the appearance of the houses in the neighborhood, which exhibit a range of architectural styles that were popular between the turn of the twentieth century and the 1950s, the Picettis appear to have sold off a number of the lots during the late teens and early 1920s. Historic aerial photographs confirm that the block, which was at that time in a neighborhood on the edge of town, was still only half developed in the late 1940s. The subdivision appears to have been a speculative investment for the family, who continued farming. Phillip Picetti died in 1924, and his widow Maria inherited the remaining property. In 1926, she deeded lots 5 – 12 to her son John, who was about 36 years old at this point. John and his wife Alice Rubke also lived in east Sonoma. John Picetti had a furniture store in town, ran the family farm with his brother, and was elected mayor of Sonoma in 1942. In 1940, Joseph and Rose Vella purchased lots 7 and 8 of Picetti Terrace from John and Alice Picetti. Although the deed has not been discovered, the Vellas are likely to have purchased Lot 6 around the same time.[9]

Joseph Vella was born in Campobello, Italy in 1889, and emigrated to California in 1905. His wife Rose, who was the same age, was a native Californian whose parents were Swiss. In 1915, Vella established the Sonoma Mission Creamery, one of the first local commercial cheese and butter factories, and ran it with partners for many years. The couple's daughter, Carmela was born in 1920. A second daughter, Loretta, was born in 1934. Carmela Benedetto attended Sonoma schools, and began dating Rocco (Rock) Benedetto in high school. By the time she was in her early twenties, Carmela was working at the creamery as a bookkeeper. She married Rocco Benedetto in 1940.[10]

Joseph Vella constructed a building across the street from the Mission in about 1930, which became Vella's Fountain and Ice Cream Manufacturing Plant. In 1943, Rocco Benedetto was drafted into the U.S. military and served in the infantry during World War II. After the war and Rocco Benedetto's military service ended, the young couple took over the ice cream factory. From 1947 to 1977, the Benedettos operated the business as a lunch counter and ice cream shop. It became a community institution, where locals dropped by to socialize, and the Benedettos gave many local teenagers their first jobs. They had one son, Jerry. Rocco Benedetto died in 2001, and Carmela Benedetto in 2014.[11]

---

[6] Lynch, p. 225, 228, & 233.

[7] Deeds on file at the Sonoma County Recorder's office; Historic Aerials by NETR online, http://www.historicaerials.com/, Copyright 2009-2015 Nationwide Environmental Title Research, LLC, accessed May 4, 2014.

[8] U.S. Census Records, Sonoma, California, 1910, 1920; Otto von Geldern, "Plan of Sonoma," 1875.

[9] U.S. Census Records, Sonoma, California, 1920, 1940; Valerie Sherer Mathes and Diane Moll Smith, *Images of America: Sonoma Valley*, Arcadia Publishing, San Francisco: 2004, p. 44;.Deeds on file at the Sonoma County Recorder's office;

[10] U.S. Census Records, Sonoma, California, 1920, 1940; Mathes, 2004, p. 45.

[11] U.S. World War II Army Enlistment Records, 1938-1946; Bill Lynch, "Carmela Vella Benedetto," Sonoma Index Tribune, September 25, 2014.

Photographs:

Photograph 2: Neighborhood setting looking north on Fourth Street East, subject property left of frame, April 27, 2015.

Photograph 3: Neighborhood setting looking south on Fourth Street East from subject property showing mature trees and Patten Street intersection, April 27, 2015.

Photograph 6: East elevation showing decorative screen, door, and massive chimney, camera facing west, April 27, 2015.

Photograph 7: West (rear) and north elevations, showing carport right of frame, camera facing east, April 27, 2015.

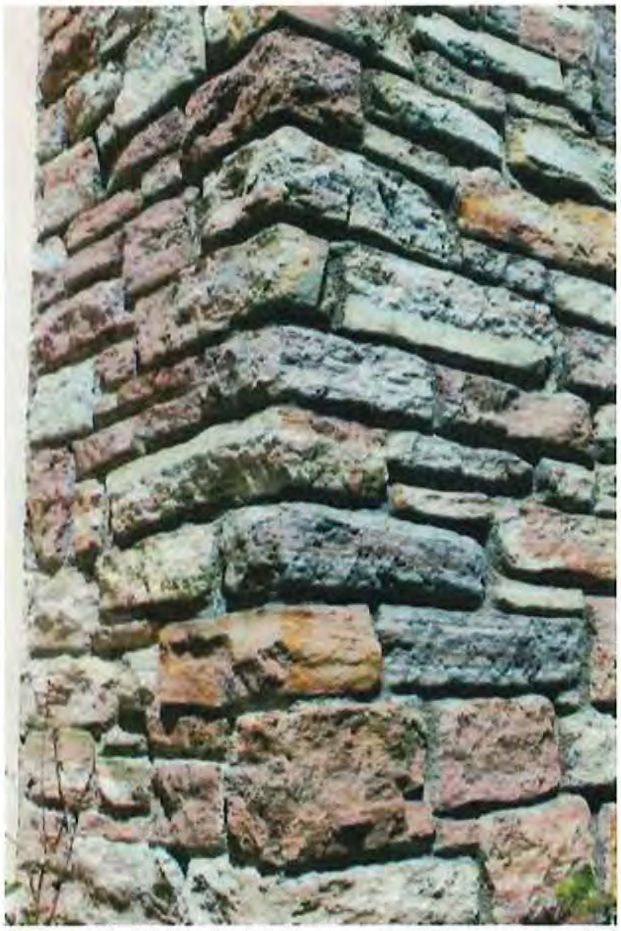

Photograph 10: Detail, rough-cut stone chimney, camera facing southwest, April 27, 2015.

City of Sonoma
Design Review and Historic Preservation Commission
Agenda Item Summary

DRHPC Agenda Item:	**6**
Meeting Date:	**06/16/15**

Applicant	**Project Location**
Strata Architects	557 Fourth Street East

Historical Significance

☐ Listed on National Register of Historic Places, including Sonoma Plaza district (Significant)
☐ Listed on California Register of Historic Resources (Significant)
☐ Listed within Local Historic Resources Survey (Potentially Significant)
☒ Over 50 years old (Potentially Significant)
Year built: 1951

Request

Design review for a new single family residence located at 557 Fourth Street East.

Summary

The architect is proposing to construct a 3,066 square foot residence, 850 square foot pool house, and 350 square foot detached garage on the property.

Zoning Requirements*:* The standards of the Low Density Residential zone applicable to the proposal are as follows:

- *Setbacks:* The new residence will meet or exceed the normal setback requirements.
  Note: the setback requirements are not currently met for the pool house/garage. The applicant has indicated that a revised site plan and elevations will be submitted prior to the DRHPC meeting.

- *Coverage:* At 20%, site coverage is less than the 40% maximum allowed in the Low Density Residential zone.

- *Floor Area Ratio:* The project would result in a F.A.R. of 0.26, which is less than the 0.40 maximum allowed.

- *Parking:* One covered parking space is provided in the detached garage. This meets the requirement.

- *Height:* The two-story residence would have a maximum ridge height of 24 feet, which is less than the 30-foot height limit allowed in the zone.

In short, the project complies with the applicable requirements of the Development Code, and is not subject to Planning Commission approval. *Note:* This is contingent upon the applicant submitting a revised site plan and elevation for the pool house consistent with the Development Code requirements.

Design Review: New single family homes located within the Historic Overlay Zone are subject to architectural review in order to assure that the new construction complies with the following: (1) the required standards, design guidelines, and ordinances of the city; (2) minimize potential adverse effects on surrounding properties and the environment; (3) implement General Plan policies regarding community design; and, (4) promote the general health, safety, welfare, and economy of the residents of the City. (§19.54.080.A).

Factors to be considered: In the coarse of Site Design and Architectural Review, the consideration of the review authority shall include the following factors:

1. The historical significance, if any, of the site or buildings or other features on the site;
   There are no historically significant features on the site.

2. Environmental features on or adjacent to the site;
   Staff is not aware of any environmental features on or adjacent to the site.

3. The context of uses and architecture established by adjacent development;
   The adjacent properties to the north, south, and west are developed with single family residences.

4. The location, design, site plan configuration, and effect of the proposed development.
   The location, design, site plan configuration, and effect of the new residence are compatible with surrounding uses. However, staff has concerns that the length of the pool house structure (54 feet) may be incompatible with the surrounding neighborhood.

In general, it is staff's conclusion that the applicant has successfully applied the applicable design guidelines in developing the plan for the replacement residence and detached garage.

Building Elevations & Exterior Materials: The design of the new residence is intended to be compatible with the surrounding neighborhood. Proposed exterior materials consist of wood channel siding on the first floor and LAP siding for the second story portion of the structure, and GAF timberline HD asphalt shingles. The first and second floors also feature a standing seam metal roof element. The front door will be composed of aluminum clad. The applicant is proposing Craftsman Bungalow style windows, gliding patio doors, and Frenchwood Hinged Patio Doors (see attached specification sheets).

Landscaping: As required by the Water Efficient Landscape Ordinance, the applicant will be submitting a landscape plan (including fences, walls, and pavers) for the DRHPC's consideration at a later date.

Required Findings: As set forth in §19.54.080.H of the Development Code, in order to approve an application for design review in the Historic Overlay Zone, the Design Review Commission must make the following findings:

1. The project complies with applicable policies and regulations, as set forth in this Development Code (except for approved Variances and Exceptions), other City ordinances, and the General Plan;
2. On balance, the project is consistent with the intent of applicable design guidelines set forth in this Development Code; and
3. The project responds appropriately to the context of adjacent development, as well as existing site conditions and environmental features.
4. The project substantially preserves the qualities of any significant historic structures or other significant historic features on the site; and
5. The project substantially complies with any applicable preservation plan or other guidelines or requirements pertaining to a local historic district as designated through SMC 19.42.020

Other permits required: In addition to the requirements of this title, the project shall be in conformance with applicable requirements of the 2013 California Building Code and where required by the 2013 California Building Code, shall obtain a building permit prior to installation.

Commission Discussion

Design Review Commission Action

❑ Approved ❑ Disapproved ❑ Referred to: _____ ❑ Continued to: _____

Roll Call Vote: _____ Aye _____ Nay _____ Abstain _____ Absent

DRC Conditions or Modifications

Attachments:

1. Project narrative packet
2. Site plan
3. Conceptual landscape plan
4. Exterior elevations
5. Architectural details
6. Typical exterior siding details
7. Roofing details
8. Elevations & Materials Sampling
9. Roofing details

cc: STRATA (Bennett Martin), via email

Martin and Alicia Herrick
152 El Ritero
Sonoma, CA 95476-1324

Mary Martinez, via will call at City hall

Patricia Cullinan, via email

Alice Duffee, via email

SLHP Historic Survey

CITY OF SONOMA
ARCHITECTURAL DESIGN REVIEW

Reference:

HERRICK RESIDENCE
557 4TH STREET EAST
SONOMA, CA

(APN#: 018-271-016-000)

May 19, 2015

STRATA A|P
STRATEGIC DESIGN STUDIO

PO BOX 1207
Sonoma, CA 95476
T 707.935.7944
F 707.935.6618
www.STRATAap.com

MAY 19 2015

TABLE OF CONTENTS

Project Narrative

Drawings (24X36):
- Vicinity Map / Zoning Information
- Site Plan
- Landscape Plan
- Building Elevations
- Typical Architectural and Construction Details

Street Elevation with Context

Proposed Color Schemes

Product Information

Historic Report

Material Sample Board
- *Separate Submittal Provided at Meeting*

MAY 19 2015

PROJECT NARRATIVE

Reference:

HERRICK RESIDENCE
557 4TH STREET EAST
SONOMA, CA

(APN#: 018-271-016-000)

This project consists of the demolition of the existing building located at 557 4th Street East in Sonoma, CA in order to construct a new 3,000 sq. ft. single family residence. The proposed design also includes a detached single-car garage and 850 sq. ft. pool house at the rear of the property.

The two-story proposed design takes the surrounding neighborhood topography into consideration reflecting the adjacent neighbors. The body of the building closest to the North neighbor will have the highest roof line, complimenting the existing two-story Craftsman. While the proposed carport will have a lower roof line reflecting the single-story building to the South.

The proposed architectural design of the new building as a Craftsman style home respects the current atmosphere of this neighborhood. After careful evaluation of the surrounding area, the exterior building materials and colors were selected to enhance the neighborhood fabric.

Site work will include the replacement of existing trees and vegetation. Along with the preservation of an existing 28" diameter Oak tree. All trees and vegetation will be selected in accordance with CalGreen requirements with the overall goal of preserving the integrity of the existing neighborhood.

This non-conforming site provided design challenges. Regardless, the proposed design is in compliance with all Central-East Area, R-L zoning requirements, site setbacks, lot coverage, floor area ratio and height restrictions.

MAY 19 2015

4th STREET EAST ELEVATION

547 4th Street East

557 4th Street East

567 4th Street East

STRATA A|P ARCHITECTURE PLANNING

MAY 19 2015

COLOR SCHEME No. 1

Asphalt Shingles
GAF, Oyster Gray

Standing Seam Metal
AEP Span, Old Town Gray

Paint Color No. 1
Benjamin Moore (BM) Ivory Tusk

Trim Color
Benjamin Moore (BM) Cotton Balls

Paint Color No. 2
Benjamin Moore (BM) Montgomery White

Window Frame Color
Black

Stone
Tumbled Blue Stone

STRATA A|P ARCHITECTURE PLANNING

MAY 19 2015

COLOR SCHEME No. 1

Paint Color No. 1	BM Ivory Tusk
Paint Color No. 2	BM Montgomery White
Trim Color	BM Cotton Balls
Window Frame Color	Black
Asphalt Roof Shingle Color	Oyster Gray
Standing Seam Metal Roof Color	Old Town Gray
Stone	Tumbled Blue Stone

EAST ELEVATION

COLOR SCHEME No. 2

Asphalt Shingles
GAF, Oyster Gray

Standing Seam Metal
AEP Span, Old Town Gray

Paint Color No. 1
Benjamin Moore (BM) Briarwood

Trim Color
Benjamin Moore (BM) Cotton Balls

Paint Color No. 2
Benjamin Moore (BM) Sail Cloth

Window Frame Color
Black

Stone
Tumbled Blue Stone

STRATA A|P ARCHITECTURE PLANNING

MAY 19 2015

COLOR SCHEME No. 2

Paint Color No. 1	BM Briarwood
Paint Color No. 2	BM Sail Cloth
Trim Color	BM Cotton Balls
Window Frame Color	Black
Asphalt Roof Shingle Color	Oyster Gray
Standing Seam Metal Roof Color	Old Town Gray
Stone	Tumbled Blue Stone

EAST ELEVATION

STRATA A|P ARCHITECTURE PLANNING

MAY 19 2015

Pool House

Standing Seam Metal
AEP Span, Old Town Gray

Window Frame Color
Black

Paint and Trim Color
Benjamin Moore (BM) Cotton Balls

STRATA A|P ARCHITECTURE PLANNING

MAY 19 2015

Pool House

Paint Color No. 1	BM Cotton Balls
Trim Color	BM Cotton Balls
Window Frame Color	Black
Standing Seam Metal Roof Color	Old Town Gray

EAST ELEVATION

2/12/2015

PRODUCT INFORMATION SHEET

Timberline HD® Shingles

Made to protect your home. Your story. And those of over 50 million of your fellow Americans!

PRODUCT INFORMATION

Timberline HD® Lifetime High Definition® Shingles

There's a Timberline® Shingle To Fit Your Taste And Your Budget.

- **Beautiful Look . . .** Features GAF's proprietary color blends and enhanced shadow effect for a genuine wood-shake look.
- **Highest Fire Rating . . .** Class A fire rating from Underwriters Laboratories.
- **High Performance . . .** Designed with Advanced Protection® Shingle Technology, which reduces the use of natural resources while providing excellent protection for your home (visit gaf.com/aps to learn more).
- **Stays In Place . . .** Dura Grip™ Adhesive seals each shingle tightly and reduces the risk of shingle blow-off. Shingles warranted to withstand winds up to 130 mph.*
- **Peace Of Mind . . .** Lifetime ltd. transferable warranty with Smart Choice® Protection (non-prorated material and installation labor coverage) for the first ten years**
- **Perfect Finishing Touch . . .** Use Timbertex® Premium Ridge Cap Shingles or Ridglass® Premium Ridge Cap Shingles†

*This wind speed coverage requires special installation; see *GAF Shingle & Accessory Ltd. Warranty* for details.

** See *GAF Shingle & Accessory Ltd. Warranty* for complete coverage and restrictions. The word "Lifetime" means as long as the original individual owner(s) of a single-family detached residence [or the second owner(s) in certain circumstances] owns the property where the shingles are installed. For owners/structures not meeting the above criteria, Lifetime coverage is not applicable.

† Timbertex® Premium Ridge Cap Shingles are available across the U.S. (except the Western Area). Ridglass® Premium Ridge Cap Shingles are available only in the Western Area of the U.S.

COLORS/AVAILABILITY

- COLORS: Barkwood, Birchwood, Biscayne Blue, Canadian Driftwood, Charcoal, Copper Canyon, Driftwood, Fox Hollow Gray, Golden Amber, Hickory, Hunter Green, Mission Brown, Oyster Gray, Patriot Red, Pewter Gray, Shakewood, Slate, Sunset Brick, Weathered Wood, White, Williamsburg Slate
- REGIONAL AVAILABILITY[1]: Northeast, Southeast, Southwest, West, and Central Areas

[1] See http://www.gaf.com/Roofing/Residential/Products/Shingles/Timberline/High_Definition for color availability in your area

MAY 19 2015

APPLICABLE STANDARDS & PROTOCOLS

- UL 790, Class A
- Dade County Approved – 130419.04 (Location dependent contact Technical Services – 800.766.3411)
- Florida Building Code Approved FL10124-R12
- UL 997 modified to 110 mph
- ASTM D7158, Class H
- ASTM D3161, Class F
- ASTM D3018, Type 1
- ASTM D3462
- ICC Evaluation Services ESR-1475
- ICC Evaluation Services ESR-3267***
- Texas Department of Insurance
- ENERGYSTAR® (White Only) (U.S. Only)
- Title 24 (White Only)

Effective 7/1/08, existing NYC MEA's may be used but are no longer required.

***Obtained ESR 3267 evaluation from ICC Evaluation Services based on compliance with the requirements of AC438, an acceptance criteria established by ICC Evaluation Services to evaluate asphalt shingles that contains performance tests in addition to those required by the building code. (ICC Evaluation Services provides technical evaluations of building products that directly address the issue of code compliance. Building inspectors use these evaluation reports to help determine code compliance and enforce building regulations.)

PRODUCT/SYSTEM SPECIFICS†††

- Fiberglass Asphalt Construction
- Dimensions (approx..): 13 1/4" x 39 3/8"
- Exposure: 5 5/8"
- Bundles/Square: 3
- Pieces/Square: 64
- Nails/Square: 256 (384 where 6 nails per shingle is required)††††
- StainGuard® Protection: Yes (Location dependent, contact Technical Services – 800.766.3411)
- Hip/Ridge: Timbertex®; Seal-A-Ridge®; Z® Ridge; Ridglass® 8"; Ridglass® 10"
- Starter: ProStart™; WeatherBlocker™

†††Refer to complete application instructions.

††††required by some local codes and required for enhanced wind coverage on certain products.

INSTALLATION

Detailed instructions are provided on the inside of each bundle wrapper of Timberline HD® shingles. Application sheets may also be obtained at www.gaf.com .

MAY 19 2015

Architectural Metal Roofing and Siding **Standard Colors**

AEP SPAN

Cool DURATECH® 5000 — Premium Fluoropolymer (PVDF) Coating

ZINCALUME® Plus*
SRI: 65 • 24ga, 22ga & 20 ga

Cool Regal White
SRI: 86 • 24ga & 22ga

Cool Parchment
SRI: 57 • 24ga & 22ga

Cool Sierra Tan
SRI: 55 • 24ga & 22ga

Cool Terra-Cotta
SRI: 41 • 24ga & 22ga

Cool Red
SRI: 41 • 24ga & 22ga

Cool Colonial Red
SRI: 33 • 24ga & 22ga

Cool Old Town Gray
SRI: 42 • 24ga & 22ga

Cool Zinc Grey
SRI: 39 • 24ga & 22ga

Cool Weathered Copper
SRI: 34 • 24ga & 22ga

Cool Dark Bronze
SRI: 31 • 24ga & 22ga

Cool Matte Black
SRI: 39 • 24ga & 22ga

Cool Tahoe Blue
SRI: 32 • 24ga & 22ga

Cool Regal Blue
SRI: 27 • 24ga & 22ga

Cool Marine Green
SRI: 43 • 24ga & 22ga

Cool Hemlock Green
SRI: 33 • 24ga & 22ga

Cool Jade Green
SRI: 29 • 24ga & 22ga

Cool Leaf Green
SRI: 28 • 24ga & 22ga

Cool Forest Green
SRI: 26 • 24ga & 22ga

Vintage®
SRI: 22 • 24ga & 22ga

Vintage coated metal is an innovative coating process over a TruZinc® G90 metallic coated steel surface producing a beautiful, durable, aged-metallic finish.

Dura Tech® coatings combine the corrosion protection of a ZINCALUME® substrate with a highly durable resin formulation and cool pigment technology to provide excellent color retention and reduces the demand for energy.

Cool DURATECH® mx — Premium Fluoropolymer (PVDF) Pearlescent Coating

Cool Metallic Silver
SRI: 64 • 24ga & 22ga

Cool ZACtique® II
SRI: 36 • 24ga & 22ga

Cool Metallic Champagne
SRI: 52 • 24ga & 22ga

Cool Metallic Copper
SRI: 52 • 24ga & 22ga

*Clear acrylic coated

SRI = Solar Reflective Index (ASTM E-1980, based on medium wind speed)

Custom colors available by request

MAY 19 2015

Cool **Dura Tech®** Fluoropolymer Coatings

AEP SPAN

KYNAR 500® OR HYLAR 5000® COLOR FINISHES – Provides excellent resistance to weathering and aging for maximum exterior durability.

	ASTM[1]	PERFORMANCE
Standard Film Thickness	D140	0.15 - 0.25 mil primer, 0.70 - 0.80 mil top coat 0.50 mil backer coat (Polyester system applied over a primer)
Marine Environment Film Thickness	D140	0.70 - 0.80 mil primer, 0.70 - 0.80 mil topcoat, 0.40 - 0.05 mil clear coat
Other unusual environmental conditions or specialized pigmentation may have different primer and clear coat requirements		
Specular Gloss	D523	8-15% at 60° (Dura Tech 5000) 15-25% at 60° (Dura Tech mx)
Pencil Hardness	D3363	F-2H
Flexibility T-Bend	D4145	2T No loss of adhesion or evidence of cracking[2]
Cross Hatch Adhesion	D3359	No adhesion loss
Reverse Impact	D2794	No cracking or loss of adhesion
Abrasion, Falling Sand	D968	65 liters minimum
Flame Test	E84	Class A coating
Acid Pollutants 20% Sulfuric Acid, 18hrs. 10% Muriatic Acid, 24hrs.	D1308	 No bleaching No color change, no blistering
Acid Rain Test	Kesternich	15 cycles minimum
Alkali Resistance	Kesternich	No effect
Salt Spray Resistance	B117	Passes 1,000 hours, coated steel[2]
Cyclic Salt Fog	B5894	2,000 hours passes adhesion
Humidity Resistance @ 100°	B2247	Passes 2,000 hours, coated steel[2]
South Florida Exposure	D2244	<5 NBS units change
UVB	D822	Passes 3,000 hours
Chalk Resistance	D659	Rating of 8 minimum
ZINCALUME® and Galvalume® substrate	A792	55% aluminum-zinc alloy coated steel with a metallic coating weight of AZ50

FINISH WARRANTIES

Warranties for chalk, fade and film integrity are available in durations of up to 30 years for both Dura Tech® *5000* and Dura Tech® *mx*. All AEP Span panels are offered with a corrosion warranty on Galvalume® or ZINCALUME® substrate. Terms can be affected by factors such as environment and building use. Inquire for details.

COMPOSITION & APPLICATION:

Dura Tech® 5000/mx coatings are factory applied, oven cured formulas applied by approved coil coaters. They utilize Kynar 500® or Hylar 5000® PVDF resins and inorganic, IR reflective pigments for superior long-term performance.

PRETREATMENT

All substrates are pre-treated in accordance with paint manufacturer's instructions. The pretreatment is to provide a suitable surface for application of the recommended primer.

[1] All tests performed to the latest ASTM revision. The test results set forth are representative of the results obtained by the paint manufacturer.
[2] Performances on HDG G90, ZINCALUME, Galvalume.

Color swatches are for reference only and are limited by printing process and viewing conditions. With metallic coatings, minor differences in both color and appearance are normal and to be expected. It is virtually impossible to match one metallic coating to another. Due to the coil application process, striations and longitudinal patterning may also show on these products. To minimize the possible visual effects of the normal minor differences in paint and its application, an entire job should be painted at one time. Additionally, fabricated panels, flat sheets, and flashings should be orientated in the same direction for installation. **Contact AEP Span representative for actual color samples prior to purchase.**

ARCAT

800-733-4955
www.aepspan.com

CRRC MEMBER

ZINCALUME® is a registered trademark of BlueScope Steel Ltd. Galvalume® is a registered trademark of BIEC International, Inc. TruZinc® is a registered trademark of Steelscape, LLC
Kynar 500® is a registered trademark of Arkema Inc. Hylar 5000® is a registered trademark of Solvay Specialty Polymers USA, L.L.C.
©2014 ASC Profiles LLC. All rights reserved. November 2014 10M (CC046)

MAY 19 2015

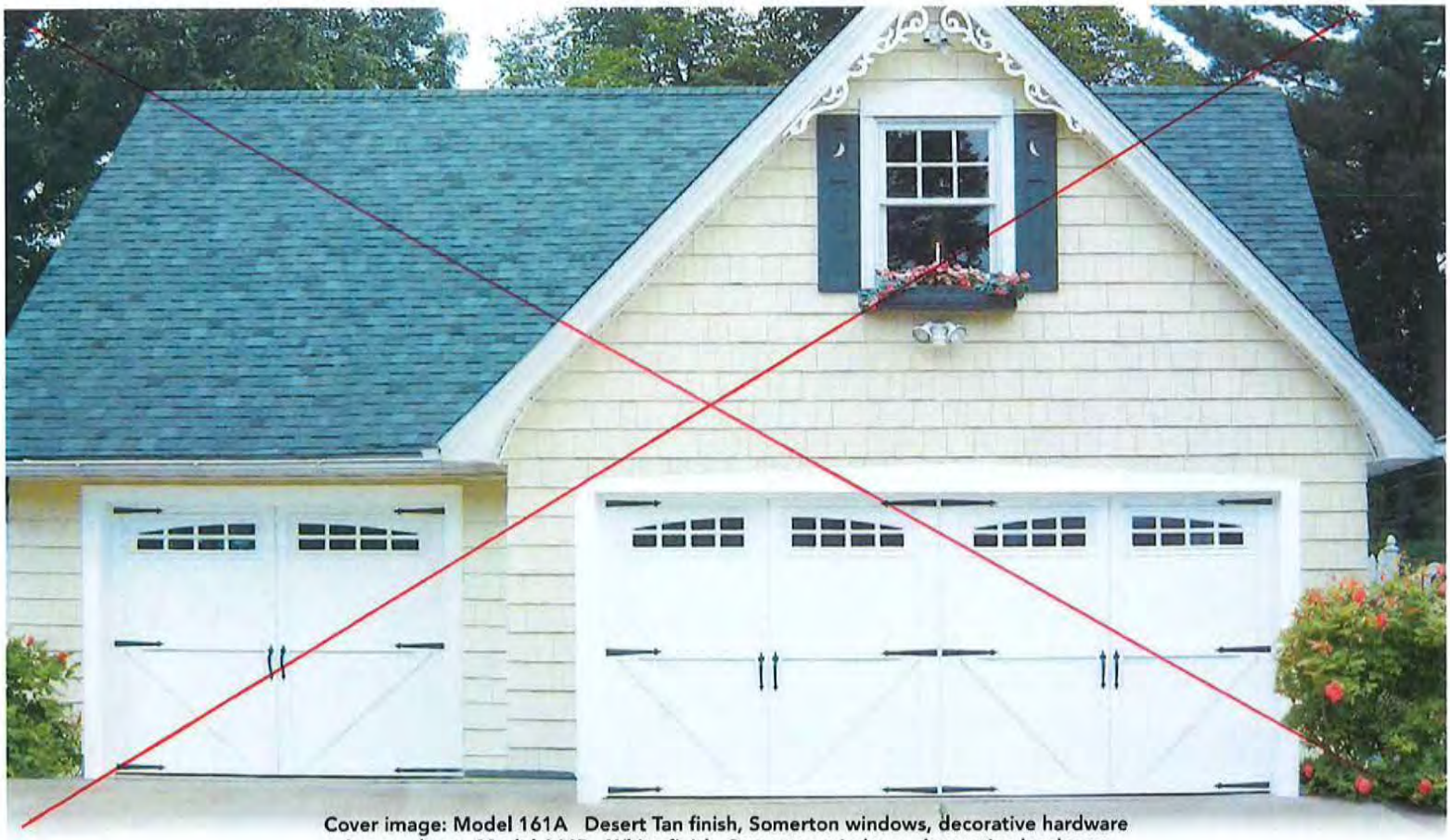

Cover image: Model 161A Desert Tan finish, Somerton windows, decorative hardware
Image above: Model 166B White finish, Somerton windows, decorative hardware

Courtyard Collection® doors offer the beauty of wood with the durability of steel. Select from our many classic designs to enhance the architectural beauty of your home.

Model 162T Terra Bronze/White finish, Stockbridge windows

MAY 19 2015

Courtyard Collection®

Door Designs

Select your door panel style

1 Choose a panel style:

The Courtyard Collection® includes two series of models – please see the chart at the bottom of the page for details. Some panel styles are only offered in the 160 series as indicated below.

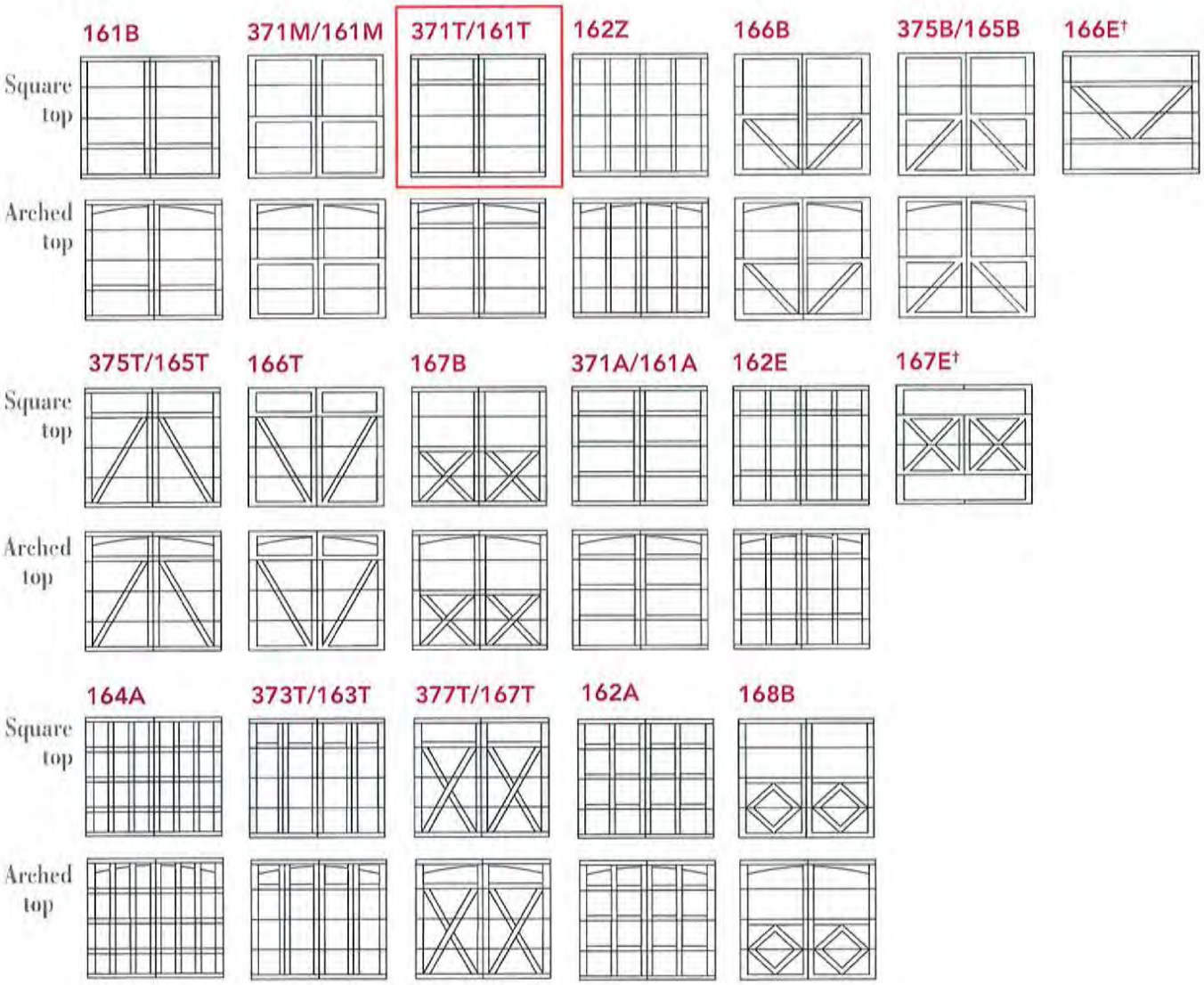

†Windows and arches not available.

Series	Wood grain trim	Color matched trim	Warranty	Polyurethane insulation	R-value*	U-factor**	Overlay thickness	Door thickness	Commercial track	Residential track	Ball bearing rollers with nylon wheels
370	•		20-year limited	•	9.3	0.24	⅜"	1"	optional	•	•
160	•	•	Limited lifetime	•	12.76	0.24	¾"	1 ⅜"	•		•

* R-value: The higher the R-value, the greater the insulating properties.
** U-factor: A tested value of actual energy loss - of an installed door, wall, or window assembly.

MAY 19 2015

Courtyard Collection®

Decorative Accents

Customize your door with color and windows

2 Choose a color:

Door overlays and window trim are available in the colors shown or can be painted to match your home's décor (additional charges may apply). Actual door colors may vary from brochure photos due to fluctuations in the printing process. Ask your Overhead Door Distributor for color samples.

White

Almond

Desert Tan

Sandstone

Terra Bronze

Brown

Hunter Green

3 Choose a window style:

Wind load-rated windows are offered only for the 160 Series.

Clear Long

Stockbridge

Stockton

Stockton Arch

Somerton

Wyndbridge

Choose a glass type:

370 Series available with single pane glass only. 160 Series available with insulated glass.

Clear

Obscure

Satin

MAY 19 2015

Andersen WINDOWS • DOORS

Come home to Andersen.

RESIDENTIAL
ENTRY DOORS

MAY 1 8 2015

RESIDENTIAL ENTRY DOORS

FEATURES

Frame

Ⓐ Heavy-duty extruded aluminum cladding protects the frame exterior, providing low-maintenance durability. Standard cladding finish meets AAMA 2604. An optional finish that meets the AAMA 2605 standard is also available.

Installation flange extends 1 ½" (38) around three sides of the unit to help properly position the unit in the opening. Installation clips are standard for increased structural anchoring to building members. Mounted around the frame perimeter, the clips rotate into position and can be bent into place against the framing members to suit all jamb conditions.

Ⓑ Wood frame members are treated with a water-repellent wood preservative for long-lasting* protection and performance. Radii are made of laminated continuous veneers. Lineal components are engineered wood with a pine core.

Ⓒ Extruded aluminum sill is thermally broken and available in painted bronze or gray finish. Innovative sill design provides superior water management. Standard outswing sills have an oak cap. Maple or mahogany** is optional. Inswing sills have an interior wood trim strip to match the interior finish.

Ⓓ One-piece compression weatherstripping at the frame sides and head protects against air and water infiltration. Flexible thermoplastic sweep is featured at the bottom of the panel on inswing units. Outswing doors also feature a polypropylene rainskirt at the panel sides and top for added protection.

Panel

Ⓔ Heavy-duty extruded aluminum cladding protects the panel exterior, providing low-maintenance durability. Panels also available without cladding.

Ⓕ Panel interior surfaces are unfinished wood veneers. Available species are pine, oak, maple, alder, cherry, douglas fir and mahogany.**

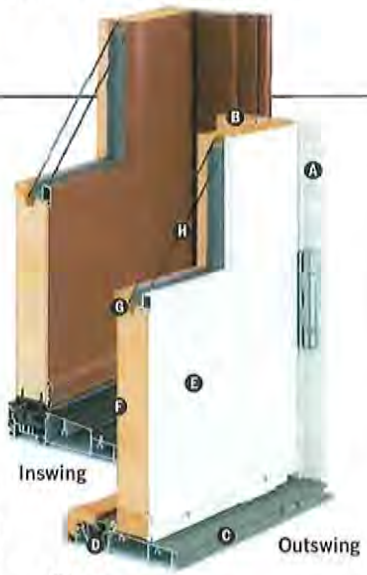

Glass

Ⓖ Silicone glazing bead combined with two-sided silicone tape provides superior weathertightness.

Ⓗ High-performance glass options include:

- Low-E4® tempered glass
- Low-E4® SmartSun™ tempered glass
- Low-E4® Sun tempered glass

Additional glass options are available. Contact your Andersen supplier.

A removable translucent film helps shield the glass from damage during delivery and construction and simplifies finishing at the jobsite.

Hardware

Multi-Point Locking System/Expanded Offering

Residential entry doors have a multi-point locking option with two hook bolts above and below the deadbolt. This system provides added weathertightness and enhanced security. For hardware style and finish options see pages 14-15.

Selecting the multi-point option allows you to choose hardware in a variety of styles and finishes. Mix-and-match style and finish options are available to get just the right look inside and out.

Exterior Keyed Lock

A six-pin key cylinder lock is available in styles and finishes that coordinate with hardware. This lock allows the door to be locked and unlocked from the exterior.

Hinges

Ball-bearing hinges are standard on outswing entry doors and are available in stainless steel finish, dark bronze finish and white finish to complement hardware trim sets.

Adjustable hinges are standard on inswing entry doors and have ball-bearing pivots for smooth, frictionless movement. Features easy horizontal and vertical adjustment, plus quick-release feature for easy panel removal. Gold dust finish is standard on wood interior doors. For units with a prefinished White interior, White finish hinges are standard. Also available in finishes that coordinate with hardware.

Aftermarket Hardware

For hardware purchased separately, doors can be ordered predrilled for easy on-site installation. They can also be specified without hardware drilling.

Operation

Inswing and outswing units are available. Choose left-hinged, right-hinged or stationary as viewed from the exterior.

Sill

A low-rise commercial sill is also available. See page 207 for more details.

ACCESSORIES Sold Separately

Frame

Extension Jambs

Inswing and outswing standard jamb depth is 4 $\frac{9}{16}$" (116). Inswing is also available in a 6 $\frac{9}{16}$" (167) jamb depth. Interior extension jambs are available in the following thicknesses:

- 5 ¼" (133)
- 6 $\frac{9}{16}$" (167)
- 7 ⅛" (181)

Interior extension jambs on inswing units will restrict the full opening of the door.

Casings

Curved interior casings are available in the same profiles as other Andersen® products. Curved exterior aluminum and wood casings are available in matching radii and a variety of profiles.

Hardware

Handle extensions extend interior door handles an additional 1" (25) from the door panel to accommodate interior blinds or shades. A second extender may be added to the spindle to increase the length an additional 1" (25) to a 2" (51) total extension. Extenders and spindles are sold separately. Extenders are available in finishes that coordinate with hardware.

Panel Designs

For additional panel design ideas, visit andersenwindows.com to download a copy of our Entranceways Brochure.

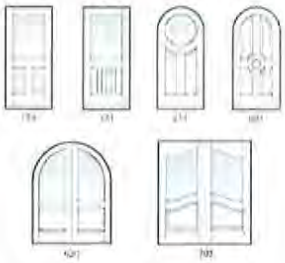

EXTERIOR

EXTERIOR / INTERIOR

WOOD SPECIES (Additional species available)

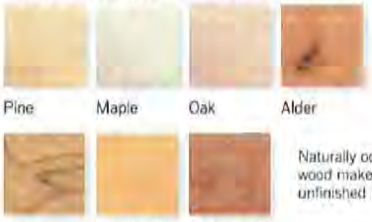

INTERIOR

PAINTED OPTIONS

Naturally occurring variations in grain, color and texture of wood make each door one-of-a-kind. All wood interiors are unfinished unless a painted option is specified.

* Visit andersenwindows.com/warranty or contact your Andersen supplier for details on our limited warranties.

** Actual wood is Sapele, a non-endangered species of mahogany, grown in Africa, with color and characteristics similar to American mahoganies.

Dimensions in parentheses are in millimeters.

Printing limitations prevent exact duplication of colors and finishes. See your Andersen supplier for actual color and finish samples.

MAY 1 0 2015

Craftsman Bungalow

SIMILAR STYLE: Prairie Shingle

Craftsman-style houses emerged from the traditions of Arts & Crafts designs found throughout the country that promoted a simple decorative expression of structural elements. The bungalow is one of the most common house styles that emerged from that movement.

COMMON FEATURES:

- Double-hung windows are predominant, but casement windows are also common
- Grilles are used in upper sash of double-hung windows, creating vertical proportions
- Exterior window trim is usually 4½-inch-wide flat trim with sill nose
- Window frame and sash are often one color and the exterior trim is a contrasting color
- Exterior window colors tend to be in the warm, earthy range of browns, greens, burgundies and yellows

Casement window exterior
- Flat exterior trim: Prairie Grass
- Frame exterior color: Dark Bronze
- Sash exterior color: Dark Bronze
- Tall fractional with simulated check rail grille pattern

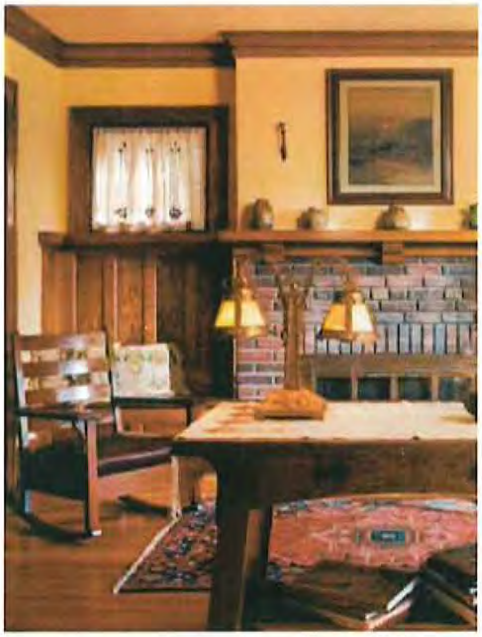

A-SERIES STYLE RECOMMENDATIONS

For additional choices, see pages 20–35.

EXTERIOR COLOR

Prairie Grass/Dark Bronze

INTERIOR STAIN

Espresso

HARDWARE

Window: Traditional Folding Handle

Patio Door: Albany

Finish: Black

ENTRANCEWAY

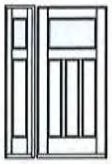

Door: 404
Sidelight: 401

For more information, please visit andersenwindows.com/entranceways

ART GLASS

Arts & Crafts Design

See pages 30–31 for additional art glass options.

 Printing limitations prevent exact duplication of colors and replication of finishes. Please see your Andersen dealer for actual color and finish samples.

MAY 19 2015

Andersen WINDOWS • DOORS

FRENCHWOOD® GLIDING PATIO DOORS

CUSTOM SIZING!
in ⅛" (3) increments

SECTION REFERENCE

Table of Sizes 148
Specifications 149
Grille Patterns 149
Door Details 150-152
Joining Details 152
Door Sidelights & Transoms 171
Combination Designs 255
Performance Data 267
Warranty 287

Dimensions in parentheses are in millimeters.

MAY 19 2015

FRENCHWOOD® GLIDING PATIO DOORS

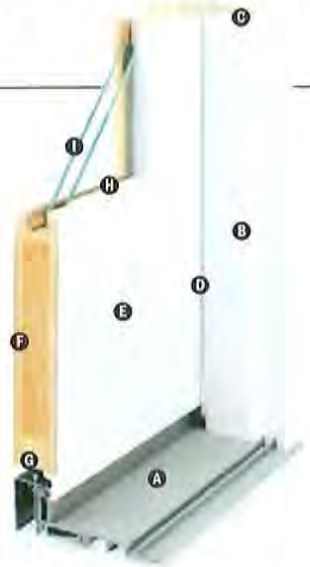

FEATURES

Frame

A The sill has an extruded aluminum track, with a stainless steel cap that resists stain, rust and denting.* A thermal barrier reduces conductive heat loss and limits condensation on the inside. The sill has an attractive wear-resistant, heat-baked finish in a neutral gray color.

B All basic exterior frame members are covered with a rigid vinyl sheath that maintains an attractive appearance while minimizing maintenance.

C Wood frame members are treated with a water-repellent preservative for long-lasting* protection and performance. Interior frame trim pieces are unfinished pine. Oak and maple veneer and prefinished White interior options are available.

Factory-assembled doors are available (two-panel doors) and arrive at the jobsite ready to install. Unassembled doors are also available and require jobsite assembly.

D A flexible vinyl weatherstrip at the head and side jambs provides a positive seal between the frame and panels.

Panel

E The exterior of the wood door panel is protected with a low-maintenance urethane base finish in White, Sandtone, Terratone® or Forest Green color.

F Panel interior surfaces are unfinished pine veneer. Unfinished oak and maple veneers are available as options. Low-maintenance prefinished White interiors are also available on units with White exteriors.

G Dual ball-bearing rollers on door panels provide smooth gliding operation with self-contained leveling adjusters.

Mortise-and-Tenon Joints

Panel joints are mortise-and-tenon with patented dowel construction for maximum strength.

Flexible Seal

A full-length combination weatherstrip/interlock system provides a flexible seal at the meeting stile.

Glass

H Panels are silicone bed glazed and finished with an interior wood stop.

I High-performance glass options include:

- Low-E4® tempered glass
- Low-E4® SmartSun™ tempered glass
- Low-E4® Sun tempered glass

Additional glass options are available. Contact your Andersen supplier.

A removable translucent film helps shield the glass from damage during delivery and construction and simplifies finishing at the jobsite.

Patterned Glass

Patterned glass options are available. See page 10 for more details.

EXTERIOR

White, Sandtone, Terratone®, Forest Green

INTERIOR

Pine, White, Maple, Oak

Prefinished White interiors are only available on units with White exteriors.

Naturally occurring variations in grain, color and texture of wood make each door one-of-a-kind. All wood interiors are unfinished unless prefinished White is specified.

HARDWARE FINISHES

Antique Brass, Black, Bright Brass, Brushed Chrome, Distressed Bronze, Distressed Nickel, Gold Dust, Oil Rubbed Bronze, Polished Chrome, Satin Nickel, Stone, White

Distressed bronze and oil rubbed bronze are "living" finishes that will change with time and use.

GLIDING PATIO DOOR HARDWARE OPTIONS** *Bold name denotes finish shown.*

YUMA®

Distressed Bronze
Distressed Nickel

ENCINO®

Distressed Bronze
Distressed Nickel

ANVERS®

Bright Brass
Oil Rubbed Bronze
Satin Nickel

NEWBURY®

Antique Brass
Bright Brass
Brushed Chrome
Oil Rubbed Bronze
Polished Chrome
Satin Nickel

COVINGTON™

Antique Brass
Bright Brass
Oil Rubbed Bronze

WHITMORE®

Antique Brass
Bright Brass
Oil Rubbed Bronze
Satin Nickel

ALBANY

Black
Gold Dust
Stone
White

TRIBECA®

Stone
White

* Visit andersenwindows.com/warranty or see your Andersen supplier for details on the 400 Series Limited Warranty.

** Hardware sold separately.

Dimensions in parentheses are in millimeters.

Printing limitations prevent exact duplication of colors and finishes. See your Andersen supplier for actual color and finish samples.

Tribeca and Albany hardware are zinc diecast with powder-coated durable finish. Other hardware is solid forged brass. Mix-and-match interior and exterior style and finish options are available. Bright brass and satin nickel finishes feature a 10-year limited warranty.

MAY 19 2015

Locking System

Reachout Locking Hardware

The unique Andersen reachout locking system pulls the door panel snugly into the jamb for weathertightness and enhanced security.

ACCESSORIES Sold Separately

Frame

Extension Jambs

Standard jamb depth is 4 9/16" (116). Pine, oak or maple veneer or prefinished White interior extension jambs are available for the following wall thicknesses:

- 5 1/4" (133)
- 6 9/16" (167)
- 7 1/8" (181)

Threshold

An oak or maple threshold is available for finishing the interior of the sill.

Ramped Sill Insert

Ramped sills provide smooth transition from interior to exterior and can be used with a retractable insect screen, but not a gliding insect screen. Shown here with an Andersen® Frenchwood® patio door. (Specifier must check with local and federal officials to determine if product meets accessibility codes.)

Sill Support

An aluminum sill support is designed to lock into a channel under the sill and tie back into the wall. This will offer support to the outermost sill section when needed. Available in neutral gray finish.

Hardware

Exterior Keyed Lock

A six-pin key cylinder lock is available in finishes that coordinate with hardware. This lock allows the gliding door to be locked and unlocked from the exterior.

Auxiliary Foot Lock

Provides an extra measure of security when the door is in a locked position. Lock can be set so the door is fully closed or partially open to provide a secure venting position. Available in finishes that coordinate with hardware.

Insect Screens

All insect screens have a long-lasting[1] fiberglass screen cloth with a charcoal finish and are color matched to the exterior of the door unless otherwise specified.

Gliding Insect Screen

Patented square corner joint construction adds considerable strength to the frame members. The insect screen is available for both two-panel doors and four-panel doors. Gliding insect screens have Delrin® injection-molded bottom rollers with self-contained leveling adjusters, providing smooth operation. Interior and exterior pulls and latch are provided.

Retractable Insect Screen

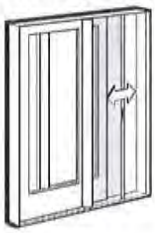

The retractable insect screen is installed on the exterior of the door and opens side-to-side across the width of the opening. When the insect screen is not in use, it neatly retracts into a small canister mounted on the exterior of the door. The retractable insect screen canister is available for two-panel patio doors in our four standard exterior colors. Please note, retractable screen track reduces clear opening height by 1" (25).

Glass

Andersen® Art Glass

Andersen art glass panels come in a variety of original patterns, including four *Frank Lloyd Wright® Series* designs. Available for stationary panels, sidelights and transoms. See pages 213-214 for details on Andersen art glass.

Grilles

Grilles are available in a variety of configurations and widths. For patio door grille patterns see page 149.

Transoms

Andersen Frenchwood patio door transoms feature elegant lines that match our 400 Series Frenchwood gliding patio doors. They feature pine, oak, maple or prefinished White interior options, plus our four standard exterior colors. See pages 171-174 for details.

Sidelights

Stationary units can also be selected for use as sidelights. See pages 171-174 for details.

Exterior Trim

This product is available with Andersen® Exterior Trim. See pages 215-220 for details.

CAUTION:

- Painting and staining may cause damage to rigid vinyl.
- 400 Series products in Terratone® color may be painted any color lighter than Terratone color using quality oil-base or latex paint. Submit color samples to Andersen for approval when painting Terratone any color darker than Terratone.
- Do not paint 400 Series products with White, Sandtone, or Forest Green exterior colors.
- Creosote-based stains should not come in contact with Andersen products.
- Do not paint weatherstripping.
- Abrasive cleaners or solutions containing corrosive solvents should not be used on Andersen products.
- For vinyl painting instructions and preparation, contact your Andersen supplier.
- Andersen does not warrant the adhesion or performance of homeowner-applied paint over vinyl or other factory-coated surfaces.

For more information about **glass, patterned glass, art glass and grilles** see pages 10-17.

For more information about **combination design, product performance, installation accessories and warranty** see pages 255-287 or visit andersenwindows.com

[1] Visit andersenwindows.com/warranty or contact your Andersen supplier for details on the 400 Series Limited Warranty.

NOTE: Andersen® patio doors are not intended for use as entrance doors.

Dimensions in parentheses are in millimeters.

"Delrin" is a registered trademark of E.I. du Pont de Nemours and Company.

"Frank Lloyd Wright" is a registered trademark of the Frank Lloyd Wright Foundation.

FRENCHWOOD® GLIDING PATIO DOORS

Three Patio Door Heights

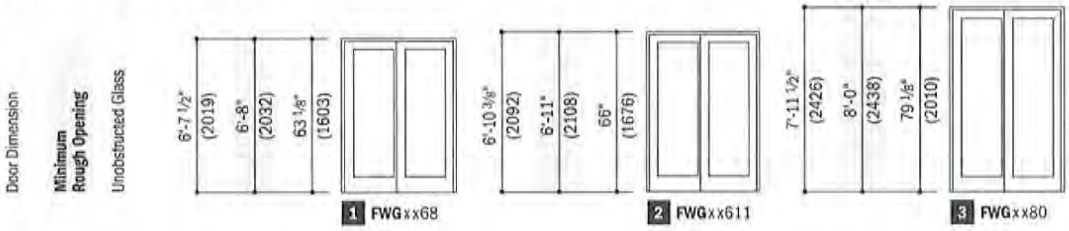

For all four-panel gliding patio doors add 1/4" (6) to the "Minimum Rough Opening" height dimension.

Table of Frenchwood® Gliding Patio Door Sizes

Scale 1/8" (3) = 1'-0" (305) – 1:96

Door Dimension	2'-8" (813)	4'-11 1/4" (1505)	4'-11 1/4" (1505)	9'-9" (2972)
Minimum Rough Opening	2'-8 3/4" (832)	5'-0" (1524)	5'-0" (1524)	9'-9 3/4" (2991)
Unobstructed Glass (single panel only)	21 1/8" (537)	21 1/8" (537)	21 1/8" (537)	21 1/8" (537)
3 heights				
1	FWG2968S	FWG5068L	FWG5068R	FWG10068-4*
2	FWG29611S	FWG50611L	FWG50611R	FWG100611-4*
3	FWG2980S	FWG5080L	FWG5080R	FWG10080-4*

Custom-size doors are available in 1/8" (3) increments between the smallest and largest standard door sizes. **Measurement guide** can be found at andersenwindows.com/measure. Some restrictions apply. Contact your Andersen supplier for availability.

Door Dimension	3'-2" (965)	5'-11 1/4" (1810)	5'-11 1/4" (1810)	11'-9" (3581)
Minimum Rough Opening	3'-2 3/4" (984)	6'-0" (1829)	6'-0" (1829)	11'-9 3/4" (3600)
Unobstructed Glass (single panel only)	27 1/8" (689)	27 1/8" (689)	27 1/8" (689)	27 1/8" (689)
3 heights				
1	FWG3368S	FWG6068L	FWG6068R	FWG12068-4*
2	FWG33611S	FWG60611L	FWG60611R	FWG120611-4*
3	FWG3380S	FWG6080L	FWG6080R	FWG12080-4*

Exterior views shown. Arrow indicates direction of panel operation.

Stationary (**S**) doors can be used as an individual unit or as a sidelight. Two-panel doors are available factory assembled and arrive at the jobsite ready to install.

Grille patterns shown on page 149.

Door Dimension	4'-2" (1270)	7'-11 1/4" (2419)	7'-11 1/4" (2419)	15'-9" (4801)
Minimum Rough Opening	4'-2 3/4" (1289)	8'-0" (2438)	8'-0" (2438)	15'-9 3/4" (4820)
Unobstructed Glass (single panel only)	39 1/8" (994)	39 1/8" (994)	39 1/8" (994)	39 1/8" (994)
3 heights				
1	FWG4368S	FWG8068L	FWG8068R	FWG16068-4*
2	FWG43611S	FWG80611L	FWG80611R	FWG160611-4*
3	FWG4380S	FWG8080L	FWG8080R	FWG16080-4*

- "Door Dimension" always refers to outside frame to frame dimension.
- **"Minimum Rough Opening" dimensions may need to be increased to allow for use of building wraps, flashing, sill panning, brackets, fasteners or other items. See page 285 for more details.**
- Dimensions in parentheses are in millimeters.

*Add 1/4" (6) to the "Minimum Rough Opening" height dimension for four-panel doors.

MAY 1 9 2015

Frenchwood® Gliding Patio Door Opening and Area Specifications

Door Number	Clear Opening in Full Open Position: Clear Opening Sq. Ft./(m²)	Width Inches/(mm)	Height Inches/(mm)	Glass Area Sq. Ft./(m²)	Vent Sq. Ft./(m²)	Overall Door Area Sq. Ft./(m²)
FWG2968	–	–	–	9.26 (0.86)	–	17.67 (1.64)
FWG3368	–	–	–	11.89 (1.11)	–	20.98 (1.95)
FWG4368	–	–	–	17.15 (1.59)	–	27.60 (2.56)
FWG5068	11.58 (1.08)	22 1/8" (562)	75 3/8" (1915)	18.52 (1.72)	11.58 (1.08)	32.71 (3.04)
FWG6068	14.72 (1.37)	28 1/8" (714)	75 3/8" (1915)	23.78 (2.21)	14.72 (1.37)	39.34 (3.66)
FWG8068	21.00 (1.95)	40 1/8" (1019)	75 3/8" (1915)	34.30 (3.19)	21.00 (1.95)	52.59 (4.89)
FWG10068	23.42 (2.18)	44 3/4" (1137)	75 3/8" (1915)	37.04 (3.44)	23.42 (2.18)	64.59 (6.00)
FWG12068	29.70 (2.76)	56 3/4" (1441)	75 3/8" (1915)	47.55 (4.42)	29.70 (2.76)	77.84 (7.23)
FWG16068	42.27 (3.93)	80 3/4" (2051)	75 3/8" (1915)	68.60 (6.37)	42.27 (3.93)	104.34 (9.69)
FWG29611	–	–	–	9.68 (0.90)	–	18.31 (1.70)
FWG33611	–	–	–	12.43 (1.16)	–	21.74 (2.02)
FWG43611	–	–	–	17.93 (1.67)	–	28.60 (2.66)
FWG50611	12.04 (1.12)	22 1/8" (562)	78 3/16" (1987)	19.36 (1.80)	12.04 (1.12)	33.89 (3.15)
FWG60611	15.31 (1.42)	28 1/8" (714)	78 3/16" (1987)	24.86 (2.31)	15.31 (1.42)	40.76 (3.79)
FWG80611	21.84 (2.03)	40 1/8" (1019)	78 3/16" (1987)	35.85 (3.33)	21.84 (2.03)	54.49 (5.06)
FWG100611	24.36 (2.26)	44 3/4" (1137)	78 3/16" (1987)	38.72 (3.60)	24.36 (2.26)	66.93 (6.22)
FWG120611	30.89 (2.87)	56 3/4" (1441)	78 3/16" (1987)	49.71 (4.62)	30.89 (2.87)	80.66 (7.49)
FWG160611	43.95 (4.08)	80 3/4" (2051)	78 3/16" (1987)	71.71 (6.66)	43.95 (4.08)	108.12 (10.04)
FWG2980	–	–	–	11.60 (1.08)	–	21.22 (1.97)
FWG3380	–	–	–	14.90 (1.38)	–	25.20 (2.34)
FWG4380	–	–	–	21.49 (2.00)	–	33.16 (3.08)
FWG5080	14.04 (1.30)	22 1/8" (562)	91 3/8" (2321)	23.20 (2.16)	14.04 (1.30)	39.29 (3.65)
FWG6080	17.85 (1.66)	28 1/8" (714)	91 3/8" (2321)	29.80 (2.77)	17.85 (1.66)	47.25 (4.39)
FWG8080	25.46 (2.37)	40 1/8" (1019)	91 3/8" (2321)	42.98 (3.99)	25.46 (2.37)	63.17 (5.87)
FWG10080	28.40 (2.64)	44 3/4" (1137)	91 3/8" (2321)	46.40 (4.31)	28.40 (2.64)	77.59 (7.21)
FWG12080	36.01 (3.35)	56 3/4" (1441)	91 3/8" (2321)	59.60 (5.54)	36.01 (3.35)	93.51 (8.69)
FWG16080	51.24 (4.76)	80 3/4" (2051)	91 3/8" (2321)	85.96 (7.99)	51.24 (4.76)	125.34 (11.64)

• Dimensions in parentheses are in millimeters or square meters.

Grille Patterns

	Prairie A	Colonial	Modified Colonial	Modified Colonial SCR (Simulated Check Rail)	Tall Fractional	Tall Fractional SCR (Simulated Check Rail)	Short Fractional	Short Fractional SCR (Simulated Check Rail)
Frenchwood® Gliding Patio Doors	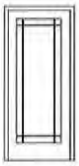	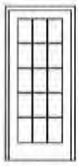	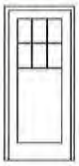	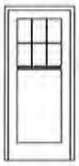	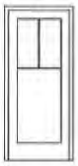	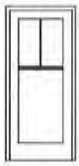	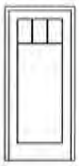	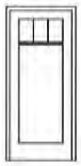

Number of lights and overall pattern varies with panel size.

Patterns are not available in all configurations.

Specified equal light and custom patterns are also available.

For more information on divided lights see page 11.

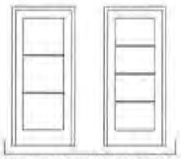

Specified Equal Light Examples

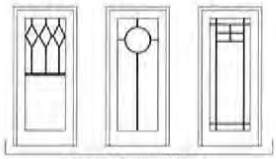

Custom Pattern Examples

MAY 19 2015

FRENCHWOOD® GLIDING PATIO DOORS

Frenchwood® Gliding Patio Door Details
Scale 1½" (38) = 1'-0" (305) – 1:8

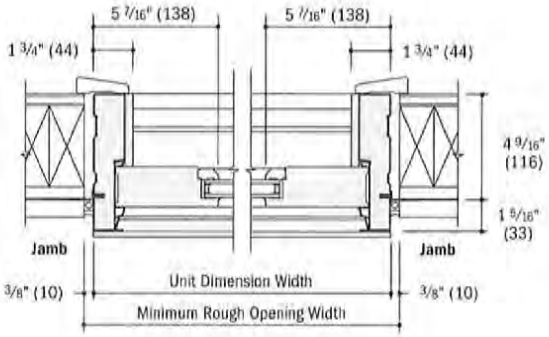

Horizontal Section
Stationary

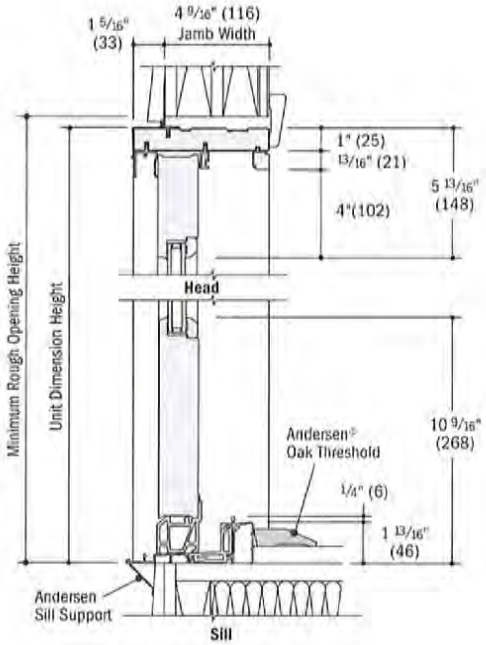

Vertical Section
Stationary

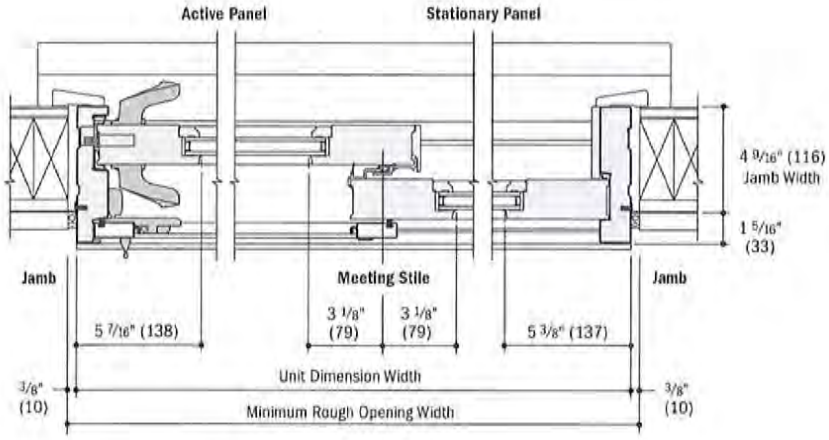

Horizontal Section
Two-Panel

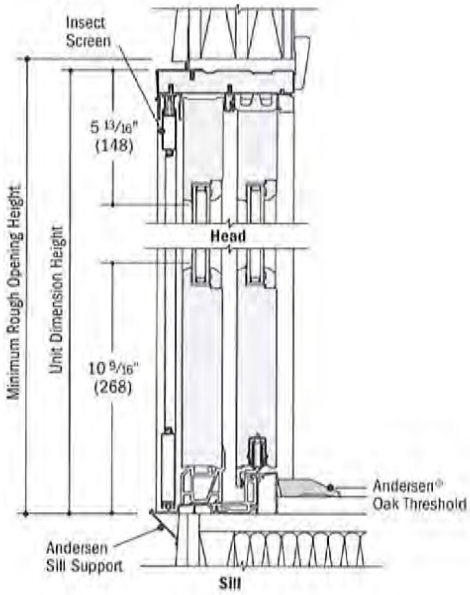

Vertical Section

- 4 9/16" (116) jamb width measurement is from backside of installation flange.
- Light-colored areas are parts included with door. Dark-colored areas are additional Andersen® parts required to complete door assembly as shown.
- **Rough openings may need to be increased to allow for use of building wraps, flashing, sill panning, brackets, fasteners or other items. See Installation Information on page 285.**
- Details are for illustration only and are not intended to represent product installation methods or materials. Refer to product installation guides at andersenwindows.com.
- Dimensions in parentheses are in millimeters.

MAY 19 2015

Frenchwood® Gliding Patio Door Details

Scale 1½" (38) = 1'-0" (305) – 1:8

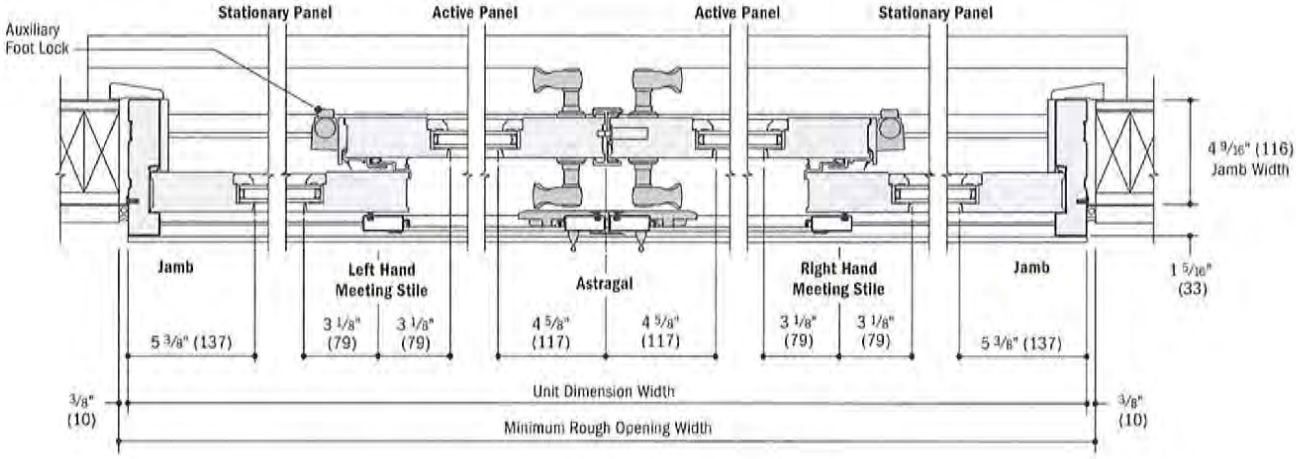

Horizontal Section
Four-Panel

Clear Opening Details

Scale 1½" (38) = 1'-0" (305) – 1:8

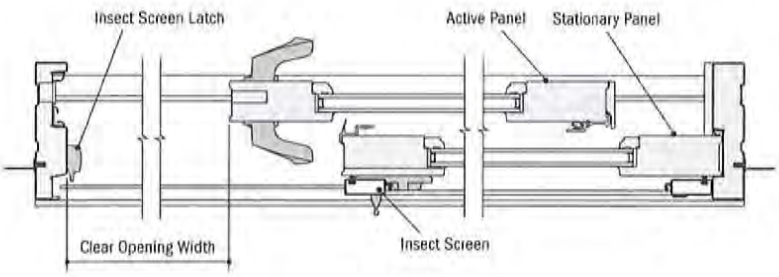

Horizontal Section
Two-Panel

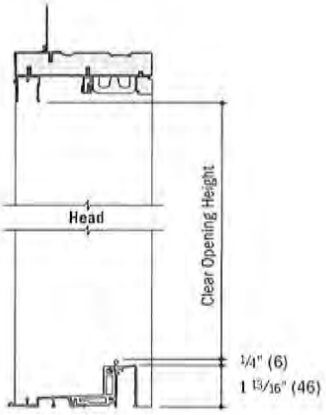

Sill
Vertical Section

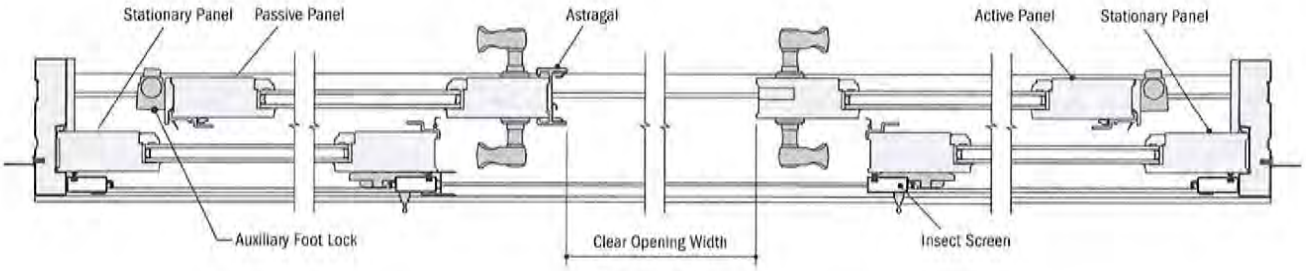

Horizontal Section
Four-Panel

- 4 9/16" (116) jamb width measurement is from backside of installation flange.
- Light-colored areas are parts included with door. Dark-colored areas are additional Andersen® parts required to complete door assembly as shown.
- **Rough openings may need to be increased to allow for use of building wraps, flashing, sill panning, brackets, fasteners or other items. See installation information on page 285.**
- Details are for illustration only and are not intended to represent product installation methods or materials. Refer to product installation guides at andersenwindows.com.
- Dimensions in parentheses are in millimeters.

MAY 19 2015

FRENCHWOOD® GLIDING PATIO DOORS

Ramped Sill Detail

Scale 1½" (38) = 1'-0" (305) – 1:8

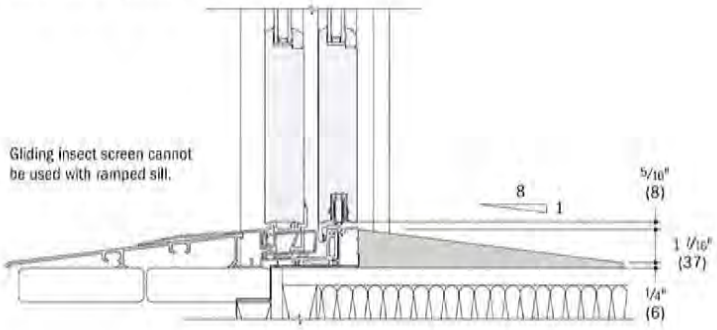

Vertical Section

Vertical Joining Detail

Scale 1½" (38) = 1'-0" (305) – 1:8

Overall Door Dimension Width

Sum of individual door widths plus 1/16" (1.5) for each join.

Overall Rough Opening Width

Overall door width plus ¾" (19).

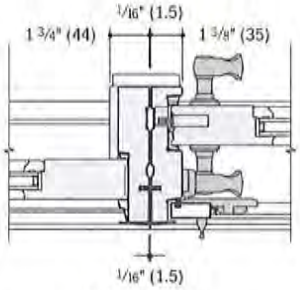

Horizontal Section
Frenchwood® Gliding to Frenchwood Gliding

Vertical LVL Joining Detail

Scale 1½" (38) = 1'-0" (305) – 1:8

Overall Door Dimension Width

Sum of individual door widths plus ¾" (19) for each join.

Overall Rough Opening Width

Overall door width plus ¾" (19).

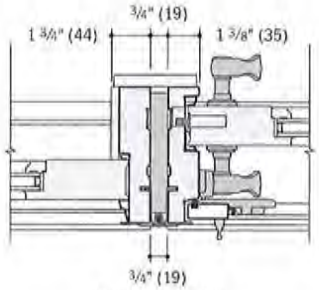

Horizontal Section
Frenchwood® Gliding to Frenchwood Gliding

Andersen does not recommend joining of receiver jamb to receiver jamb. For more joining information see the combination design section starting on page 255.

Separate Rough Openings Detail

Scale 1½" (38) = 1'-0" (305) – 1:8

To meet structural requirements or to achieve a wider joined appearance, doors may be installed into separate rough openings having vertical support (by others) in combination with Andersen® exterior filler and exterior vinyl trim.

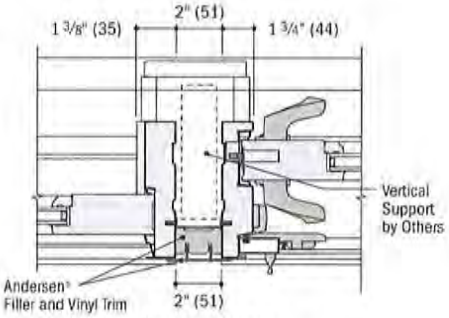

Horizontal Section
Frenchwood® Gliding and Frenchwood Gliding

- Light-colored areas are parts included with door. Dark-colored areas are additional Andersen® parts required to complete door assembly as shown.
- **Rough openings may need to be increased to allow for use of building wraps, flashing, sill panning, brackets, fasteners or other items. See installation information on page 285.**
- Details are for illustration only and are not intended to represent product installation methods or materials. Refer to product installation guides at andersenwindows.com.
- Andersen recommends installation of doors into separate rough openings. Consult with an architect or structural engineer regarding minimum requirements for structural support members between adjacent rough openings.
- Dimensions in parentheses are in millimeters.

MAY 19 2015

Andersen WINDOWS • DOORS

FRENCHWOOD® HINGED PATIO DOORS – INSWING

CUSTOM SIZING!
in ⅛" (3) increments

SECTION REFERENCE

Table of Sizes 156-157
Specifications 158
Grille Patterns 159
Door Details 159-162
Joining Details 162
Door Sidelights & Transoms 171
Combination Designs 255
Performance Data 267
Warranty 287

Dimensions in parentheses are in millimeters.

MAY 19 2015

FRENCHWOOD® HINGED PATIO DOORS — INSWING

FEATURES

Frame

Ⓐ The sill is made with three-piece construction. The subsill is made of patented Fibrex® material, and the sill step is solid oak. The exterior sill member is made of extruded aluminum with an attractive wear-resistant, heat-baked finish in a neutral color. This combination of materials combines durability and low maintenance with excellent insulating characteristics.

Ⓑ All basic exterior frame members are fiberglass reinforced composite, which maintains an attractive appearance while minimizing maintenance.

Ⓒ The exterior frame members are attached to a water-repellent preservative-treated wood subframe for long-lasting* protection and performance. The subframe is grooved to accept extension jambs.

Panel

Ⓓ The exterior of the wood door panel is protected with a long-lasting* urethane base finish in White, Sandtone, Terratone® or Forest Green color.

Ⓔ Panel interior surfaces are unfinished pine. Unfinished oak and maple veneers are available as options. Low-maintenance prefinished White interiors are also available.

Hinged inswing operating panels are left-hand active, right-hand active or two-panel active/passive jamb hinged.

Ⓕ A factory-applied, one-piece compression-type rubber weatherstrip continues in one plane around the panel to provide maximum effectiveness against water and air infiltration. The corners of the weatherstrip are welded to eliminate gaps between the panel and the frame/sill shoulder.

Mortise-and-Tenon Joints

Mortise-and-tenon joints prevent panel sag and maintain smooth operation.

Adjustable Hinges

Adjustable hinges are standard on inswing patio doors and have ball-bearing pivots for smooth, frictionless movement. Features easy horizontal and vertical adjustment, plus quick-release feature for easy panel removal. Gold dust finish is standard on wood interior doors. For units with a prefinished White interior, White finish hinges are standard. Also available in finishes that coordinate with hardware.

Shown in Gold Dust finish.

Glass

Ⓖ Panels are silicone bed glazed and finished with an interior wood stop.

Ⓗ High-performance glass options include:

- Low-E4® tempered glass
- Low-E4® SmartSun™ tempered glass
- Low-E4® Sun tempered glass

Additional glass options are available. Contact your Andersen supplier.

A removable translucent film helps shield the glass from damage during delivery and construction and simplifies finishing at the jobsite.

Patterned Glass

Patterned glass options are available. See page 10 for more details.

Hardware

Multi-Point Locking System

The multi-point locking system, with two hook bolts above and below the center dead bolt, provides added weathertightness and enhanced security.

EXTERIOR

White · Sandtone · Terratone® · Forest Green

INTERIOR

Pine · White · Maple · Oak

Prefinished White interiors are only available on units with White exteriors.

Naturally occurring variations in grain, color and texture of wood make each door one-of-a-kind. All wood interiors are unfinished unless prefinished White is specified.

HARDWARE FINISHES

Antique Brass · Black · Bright Brass · Brushed Chrome · Distressed Bronze · Distressed Nickel

Gold Dust · Oil Rubbed Bronze · Polished Chrome · Satin Nickel · Stone · White

Distressed bronze and oil rubbed bronze are "living" finishes that will change with time and use.

HINGED PATIO DOOR HARDWARE OPTIONS** *Bold name denotes finish shown.*

YUMA®	ENCINO®	ANVERS®	NEWBURY®	COVINGTON™	WHITMORE®	ALBANY	TRIBECA®
Distressed Bronze **Distressed Nickel**	**Distressed Bronze** Distressed Nickel	Bright Brass Oil Rubbed Bronze **Satin Nickel**	Antique Brass Bright Brass Brushed Chrome **Oil Rubbed Bronze** Polished Chrome Satin Nickel	Antique Brass **Bright Brass** Oil Rubbed Bronze	**Antique Brass** Bright Brass Oil Rubbed Bronze Satin Nickel	Black **Gold Dust** Stone White	Stone **White**

* Visit andersenwindows.com/warranty or see your Andersen supplier for details on the 400 Series Limited Warranty.

** Hardware sold separately.

Dimensions in parentheses are in millimeters.

Printing limitations prevent exact duplication of colors and finishes. See your Andersen supplier for actual color and finish samples.

Tribeca and Albany hardware are zinc diecast with powder-coated durable finish. Other hardware is solid forged brass. Mix-and-match interior and exterior style and finish options are available. Bright brass and satin nickel finishes feature a 10-year limited warranty.

MAY 19 2015

ACCESSORIES Sold Separately

Frame

Extension Jambs

Standard jamb depth is 4 9/16" (116). Pine, oak or maple veneer or prefinished White interior extension jambs are available for the following wall thicknesses:

- 5 1/4" (133)
- 6 9/16" (167)
- 7 1/8" (181)

Bright brass, antique brass, polished chrome, oil rubbed bronze, brushed chrome and satin nickel strike plate extensions are available for two-panel astragal hinged and single hinge doors.

Exterior extension jamb system is available for the following wall thicknesses:

- 5 1/4" (133)
- 6 9/16" (167)
- 7 1/8" (181)

In walls over 4 1/2" (114), the exterior sill extender and exterior extension jamb system allow the unit to be installed flush to the interior, so the hinged doors will open flat against the interior wall. Colored to match the exterior of the finished unit, this system provides a low-maintenance, finished exterior appearance. An extended double insect screen track is available for double-jamb hinged doors that require gliding insect screens. Exterior jamb kits are available with or without the double-insect screen track.

Ramped Sill Insert

Ramped sills provide smooth transition from interior to exterior. Shown here with an Andersen® Frenchwood® patio door. It cannot be used with hinged or gliding insect screens. (Specifier must check with local and federal officials to determine if product meets accessibility codes.)

Threshold

An oak or maple threshold is available for finishing the interior of the sill.

Sill Support

An aluminum sill support is designed to lock into a channel under the sill and tie back into the wall. This will offer support to the outermost sill section when needed. Available in neutral gray finish.

Hardware

Exterior Keyed Lock

A six-pin key cylinder lock is available in styles and finishes that coordinate with hardware. This lock allows the hinged patio door to be locked and unlocked from the exterior.

Handle Extension

Extends interior door handle an additional 1" (25) from the door panel to accommodate interior blinds or shades. Kit includes one handle extender and spindle. A second extender may be added to the spindle to increase the length an additional 1" (25) (2" (51) total extension). Extenders are available in finishes that coordinate with hardware.

Strike Plate Extensions

Bright brass, antique brass, polished chrome, oil rubbed bronze, brushed chrome and satin nickel strike plate extensions are available for single-hinge doors.

Available for the following wall thicknesses:

- 5 1/4" (133)
- 6 9/16" (167)
- 7 1/8" (181)

Panel Stop

This hinged door panel stop helps prevent wall damage when opening the inswing door. Available in finishes that coordinate with hardware.

Construction Lock

This hardware can be used on all Andersen hinged doors to help secure the jobsite during the construction phase of the project. It features an undersized escutcheon plate, which makes on-site finishing easier.

Insect Screens

All insect screens have a long-lasting* fiberglass screen cloth with a charcoal finish and are color matched to the exterior of the door unless otherwise specified.

Gliding Insect Screen

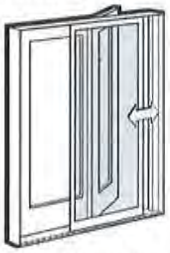

Available for all two- and three-panel doors. Features Delrin® material injection molded bottom rollers with self-contained leveling adjusters. A double insect screen track kit and two universal gliding insect screens are required for installation. Gliding insect screens are not available for 4'-0" (1219) wide doors.

Double-Insect Screen Track

An extended insect screen track is available for double-jamb hinged doors that use gliding insect screens.

Hinged Insect Screens

Available for single-panel hinged doors and two-panel double-jamb hinged doors.

Glass

Andersen® Art Glass

Andersen art glass panels come in a variety of original patterns, including four *Frank Lloyd Wright® Series* designs. See pages 213-214 for details on Andersen art glass.

Grilles

Grilles are available in a variety of configurations and widths. For patio door grille patterns see page 159.

Sidelights & Transoms

Sidelights and transoms are available for all Frenchwood hinged patio doors. See pages 171-174 for details.

Exterior Trim

This product is available with Andersen® Exterior Trim. See pages 215-220 for details.

CAUTION:

- Painting and staining may cause damage to rigid vinyl.
- 400 Series products in Terratone® color may be painted any color lighter than Terratone color using quality oil-base or latex paint. Submit color samples to Andersen for approval when painting Terratone any color darker than Terratone.
- Do not paint 400 Series products with White, Sandtone, or Forest Green exterior colors.
- Creosote-based stains should not come in contact with Andersen products.
- Do not paint Weatherstripping.
- Abrasive cleaners or solutions containing corrosive solvents should not be used on Andersen products.
- For vinyl painting instructions and preparation, contact your Andersen supplier.
- Andersen does not warrant the adhesion or performance of homeowner-applied paint over vinyl or other factory-coated surfaces.

For more information about **glass, patterned glass, art glass and grilles** see pages 10-17.

For more information about **combination design, product performance, installation accessories and warranty** see pages 255-287 or visit

andersenwindows.com

* Visit andersenwindows.com/warranty or contact your Andersen supplier for details on the 400 Series Limited Warranty.

NOTE: Andersen® patio doors are not intended for use as entrance doors.

Dimensions in parentheses are in millimeters.

"Delrin" is a registered trademark of E.I. du Pont de Nemours and Company.

"Frank Lloyd Wright" is a registered trademark of the Frank Lloyd Wright Foundation.

MAY 19 2015

FRENCHWOOD® HINGED PATIO DOORS — INSWING

Table of Frenchwood® Hinged Inswing Patio Door Sizes

Scale 1/8" (3) = 1'-0" (305) – 1:96

Door Dimension	2'-0 1/2" (620)	4'-0" (1219)	4'-0" (1219)
Minimum Rough Opening	2'-1" (634)	4'-1" (1242)	4'-1" (1242)
Unobstructed Glass (single panel only)	13 1/4" (336)	13 1/4" (336)	13 1/4" (336)
3 heights			
1	FWH2168S	FWH4168APLR	FWH4168PALR
2	FWH21611S	FWH41611APLR	FWH41611PALR
3	FWH2180S	FWH4180APLR	FWH4180PALR

Custom-size doors are available in 1/8" (3) increments between the smallest and largest standard door sizes. **Measurement guide** can be found at andersenwindows.com/measure. Some restrictions apply. Contact your Andersen supplier for availability.

Door Dimension	2'-6 1/8" (765)	2'-6 1/8" (765)	2'-6 1/8" (765)	4'-11 1/4" (1504)	4'-11 1/4" (1504)	4'-11 1/4" (1504)	4'-11 1/4" (1504)	4'-11 1/4" (1504)
Minimum Rough Opening	2'-7" (787)	2'-7" (787)	2'-7" (787)	5'-0" (1524)	5'-0" (1524)	5'-0" (1524)	5'-0" (1524)	5'-0" (1524)
Unobstructed Glass (single panel only)	18 7/8" (479)	18 7/8" (479)	18 7/8" (479)	18 7/8" (479)	18 7/8" (479)	18 7/8" (479)	18 7/8" (479)	18 7/8" (479)
3 heights								
1	FWH2768S	FWH2768AR	FWH2768AL	FWH5068SS	FWH5068ASR	FWH5068SAL	FWH5068APLR	FWH5068PALR
2	FWH27611S	FWH27611AR	FWH27611AL	FWH50611SS	FWH50611ASR	FWH50611SAL	FWH50611APLR	FWH50611PALR
3	FWH2780S	FWH2780AR	FWH2780AL	FWH5080SS	FWH5080ASR	FWH5080SAL	FWH5080APLR	FWH5080PALR

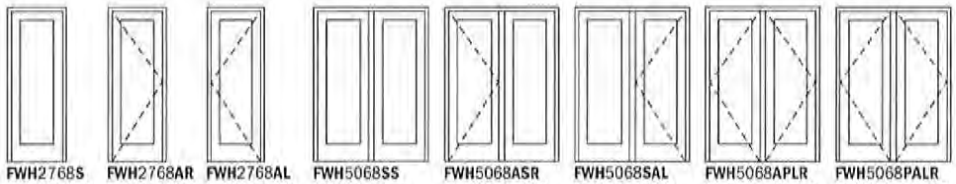

Stationary (**S**) doors can be used as an individual unit or as a sidelight.

Grille patterns shown on page 159.

Door Dimension	2'-8 1/8" (816)	2'-8 1/8" (816)	2'-8 1/8" (816)	5'-3 1/4" (1607)	5'-3 1/4" (1607)	5'-3 1/4" (1607)	5'-3 1/4" (1607)	5'-3 1/4" (1607)
Minimum Rough Opening	2'-9" (838)	2'-9" (838)	2'-9" (838)	5'-4" (1626)	5'-4" (1626)	5'-4" (1626)	5'-4" (1626)	5'-4" (1626)
Unobstructed Glass (single panel only)	20 7/8" (530)	20 7/8" (530)	20 7/8" (530)	20 7/8" (530)	20 7/8" (530)	20 7/8" (530)	20 7/8" (530)	20 7/8" (530)
3 heights								
1	FWH2968S	FWH2968AR	FWH2968AL	FWH5468SS	FWH5468ASR	FWH5468SAL	FWH5468APLR	FWH5468PALR
2	FWH29611S	FWH29611AR	FWH29611AL	FWH54611SS	FWH54611ASR	FWH54611SAL	FWH54611APLR	FWH54611PALR
3	FWH2980S	FWH2980AR	FWH2980AL	FWH5480SS	FWH5480ASR	FWH5480SAL	FWH5480APLR	FWH5480PALR

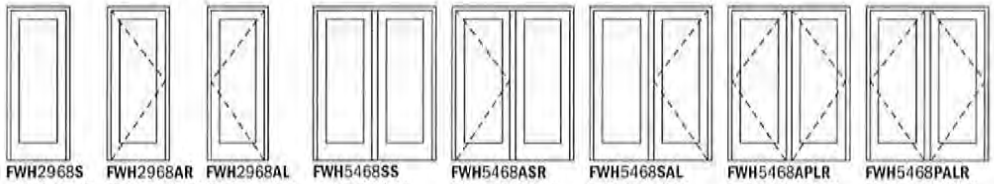

Door Dimension	3'-0 1/8" (918)	3'-0 1/8" (918)	3'-0 1/8" (918)	5'-11 1/4" (1810)	5'-11 1/4" (1810)	5'-11 1/4" (1810)	5'-11 1/4" (1810)	5'-11 1/4" (1810)
Minimum Rough Opening	3'-1" (940)	3'-1" (940)	3'-1" (940)	6'-0" (1829)	6'-0" (1829)	6'-0" (1829)	6'-0" (1829)	6'-0" (1829)
Unobstructed Glass (single panel only)	24 7/8" (632)	24 7/8" (632)	24 7/8" (632)	24 7/8" (632)	24 7/8" (632)	24 7/8" (632)	24 7/8" (632)	24 7/8" (632)
3 heights								
1	FWH3168S	FWH3168AR	FWH3168AL	FWH6068SS	FWH6068ASR	FWH6068SAL	FWH6068APLR	FWH6068PALR
2	FWH31611S	FWH31611AR	FWH31611AL	FWH60611SS	FWH60611ASR	FWH60611SAL	FWH60611APLR	FWH60611PALR
3	FWH3180S	FWH3180AR	FWH3180AL	FWH6080SS	FWH6080ASR	FWH6080SAL	FWH6080APLR	FWH6080PALR

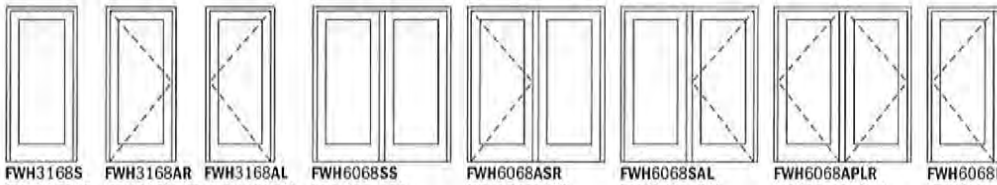

- "Door Dimension" always refers to outside frame to frame dimension.
- **"Minimum Rough Opening" dimensions may need to be increased to allow for use of building wraps, flashing, sill panning, brackets, fasteners or other items. See installation information on page 285.**
- Dimensions in parentheses are in millimeters.

MAY 19 2015

Three Patio Door Heights

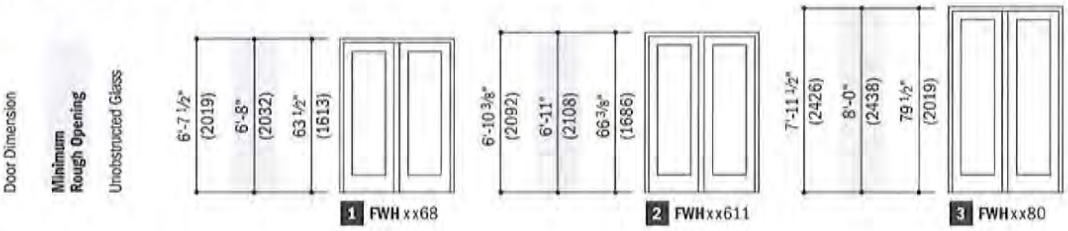

Order Designation Description

Viewed from the exterior.

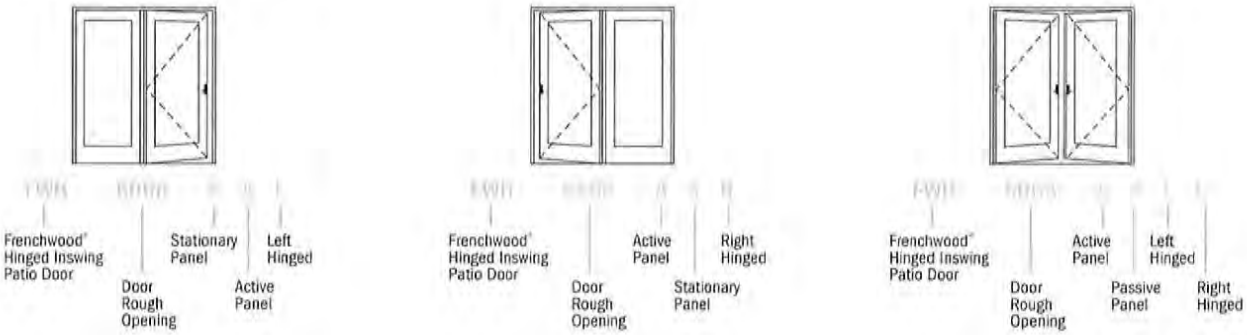

7'-11 1/8" (2416)	7'-11 1/8" (2416)	7'-11 1/8" (2416)
8'-0" (2438)	8'-0" (2438)	8'-0" (2438)
20 7/8" (530)	20 7/8" (530)	20 7/8" (530)

FWH8068SSS
FWH80611SSS
FWH8080SSS

FWH8068SASR
FWH80611SASR
FWH8080SASR

FWH8068SASL
FWH80611SASL
FWH8080SASL

8'-11 1/8" (2721)	8'-11 1/8" (2721)	8'-11 1/8" (2721)
9'-0" (2743)	9'-0" (2743)	9'-0" (2743)
24 7/8" (632)	24 7/8" (632)	24 7/8" (632)

FWH9068SSS
FWH90611SSS
FWH9080SSS

FWH9068SASR
FWH90611SASR
FWH9080SASR

FWH9068SASL
FWH90611SASL
FWH9080SASL

- "Door Dimension" always refers to outside frame to frame dimension.
- **"Minimum Rough Opening" dimensions may need to be increased to allow for use of building wraps, flashing, sill panning, brackets, fasteners or other items. See Installation Information on page 285.**
- Dimensions in parentheses are in millimeters.

MAY 19 2015

FRENCHWOOD® HINGED PATIO DOORS — INSWING

Frenchwood® Hinged Inswing Patio Door Opening and Area Specifications

Door Number	Clear Opening Maximums: Clear Opening Sq. Ft./(m²)	90° Width Inches/(mm)	Full Width Inches/(mm)	Height Inches/(mm)	Glass Area Sq. Ft./(m²)	Vent Sq. Ft./(m²)	Overall Door Area Sq. Ft./(m²)
2168S	-	-	-	-	5.74 (0.53)	-	13.39 (1.24)
2768	12.98 (1.21)	24 13/16" (630)	26" (660)	75 3/4" (1911)	8.32 (0.77)	12.98 (1.21)	16.63 (1.55)
2968	14.02 (1.30)	26 13/16" (681)	28" (711)	75 3/4" (1911)	9.20 (0.86)	14.02 (1.30)	17.74 (1.65)
3168	16.11 (1.50)	30 13/16" (783)	32" (813)	75 3/4" (1911)	10.96 (1.02)	16.11 (1.50)	19.95 (1.85)
4168AP/4168PA	21.43 (1.99)	41" (1039)	43 7/8" (1112)	75 3/4" (1911)	11.68 (1.09)	21.43 (1.99)	26.50 (2.46)
4168AP/4168PA*	21.43 (1.99)	19 7/8" (505)	21 1/16" (535)	75 3/4" (1911)	11.68 (1.09)	21.43 (1.99)	26.50 (2.46)
5068	12.98 (1.21)	24 13/16" (630)	26" (660)	75 3/4" (1911)	16.64 (1.55)	12.98 (1.21)	32.71 (3.04)
5068AP/5068PA	27.30 (2.54)	52 1/4" (1327)	55 1/8" (1400)	75 3/4" (1911)	16.64 (1.55)	27.30 (2.54)	32.71 (3.04)
5068AP/5068PA*	27.30 (2.54)	25 1/2" (647)	26 11/16" (678)	75 3/4" (1911)	16.64 (1.55)	27.30 (2.54)	32.71 (3.04)
5468	14.02 (1.30)	26 13/16" (681)	28" (711)	75 3/4" (1911)	18.39 (1.71)	14.02 (1.30)	34.92 (3.24)
5468AP/5468PA	29.39 (2.73)	56 1/4" (1429)	59 1/8" (1502)	75 3/4" (1911)	18.39 (1.71)	29.39 (2.73)	34.92 (3.24)
5468AP/5468PA*	29.39 (2.73)	27 1/2" (698)	28 11/16" (729)	75 3/4" (1911)	18.39 (1.71)	29.39 (2.73)	34.92 (3.24)
6068	16.11 (1.50)	30 13/16" (783)	32" (813)	75 3/4" (1911)	21.92 (2.04)	16.11 (1.50)	39.34 (3.66)
6068AP/6068PA	33.58 (3.12)	64 1/2" (1632)	67 1/8" (1705)	75 3/4" (1911)	21.92 (2.04)	33.58 (3.12)	39.34 (3.66)
6068AP/6068PA*	33.58 (3.12)	31 1/2" (800)	32 11/16" (830)	75 3/4" (1911)	21.92 (2.04)	33.58 (3.12)	39.34 (3.66)
8068	14.02 (1.30)	26 13/16" (681)	28" (711)	75 3/4" (1911)	27.60 (2.56)	14.02 (1.30)	52.52 (4.88)
9068	16.11 (1.50)	30 13/16" (783)	32" (813)	75 3/4" (1911)	32.88 (3.06)	16.11 (1.50)	59.14 (5.49)
2161 1S	-	-	-	-	6.01 (0.56)	-	13.89 (1.29)
2761 1	13.48 (1.25)	24 13/16" (630)	26" (660)	78 1/8" (1984)	8.69 (0.81)	13.48 (1.25)	17.21 (1.60)
2961 1	14.55 (1.35)	26 13/16" (681)	28" (711)	78 1/8" (1984)	9.61 (0.89)	14.55 (1.35)	18.36 (1.71)
3161 1	16.72 (1.55)	30 13/16" (783)	32" (813)	78 1/8" (1984)	11.45 (1.06)	16.72 (1.55)	20.64 (1.92)
4161 1AP/4161 1PA	22.24 (2.07)	41" (1039)	43 7/8" (1112)	78 1/8" (1984)	12.20 (1.13)	22.24 (2.07)	27.46 (2.55)
4161 1AP/4161 1PA*	22.24 (2.07)	19 7/8" (505)	21 1/16" (535)	78 1/8" (1984)	12.20 (1.13)	22.24 (2.07)	27.46 (2.55)
5061 1	13.48 (1.25)	24 13/16" (630)	26" (660)	78 1/8" (1984)	17.38 (1.62)	13.48 (1.25)	33.89 (3.15)
5061 1AP/5061 1PA	28.34 (2.63)	52 1/4" (1327)	55 1/8" (1400)	78 1/8" (1984)	17.38 (1.62)	28.34 (2.63)	33.89 (3.15)
5061 1AP/5061 1PA*	28.34 (2.63)	25 1/2" (647)	26 11/16" (678)	78 1/8" (1984)	17.38 (1.62)	28.34 (2.63)	33.89 (3.15)
5461 1	14.55 (1.35)	26 13/16" (681)	28" (660)	78 1/8" (1984)	19.22 (1.79)	14.55 (1.35)	36.18 (3.36)
5461 1AP/5461 1PA	30.51 (2.83)	56 1/4" (1429)	59 1/8" (1502)	78 1/8" (1984)	19.22 (1.79)	30.51 (2.83)	36.18 (3.36)
5461 1AP/5461 1PA*	30.51 (2.83)	27 1/2" (698)	28 11/16" (729)	78 1/8" (1984)	19.22 (1.79)	30.51 (2.83)	36.18 (3.36)
6061 1	16.72 (1.55)	30 13/16" (783)	32" (813)	78 1/8" (1984)	22.91 (2.13)	16.72 (1.55)	40.76 (3.79)
6061 1AP/6061 1PA	34.86 (3.24)	64 1/2" (1632)	67 1/8" (1705)	78 1/8" (1984)	22.91 (2.13)	34.86 (3.24)	40.76 (3.79)
6061 1AP/6061 1PA*	34.86 (3.24)	31 1/2" (800)	32 11/16" (830)	78 1/8" (1984)	22.91 (2.13)	34.86 (3.24)	40.76 (3.79)
8061 1	14.55 (1.35)	26 13/16" (681)	28" (660)	78 1/8" (1984)	28.83 (2.68)	14.55 (1.35)	54.43 (5.06)
9061 1	16.72 (1.55)	30 13/16" (783)	32" (813)	78 1/8" (1984)	34.36 (3.19)	16.72 (1.55)	61.30 (5.70)
2180S	-	-	-	-	7.19 (0.67)	-	16.08 (1.49)
2780	15.73 (1.46)	24 13/16" (630)	26" (660)	91 3/4" (2318)	10.41 (0.97)	15.73 (1.46)	19.98 (1.86)
2980	17.00 (1.58)	26 13/16" (681)	28" (711)	91 3/4" (2318)	11.52 (1.07)	17.00 (1.58)	21.31 (1.98)
3180	19.54 (1.82)	30 13/16" (783)	32" (813)	91 3/4" (2318)	13.72 (1.28)	19.54 (1.82)	23.96 (2.23)
4180AP/4180PA	25.98 (2.41)	41" (1039)	43 7/8" (1112)	91 3/4" (2318)	14.62 (1.36)	25.98 (2.41)	31.83 (2.96)
4180AP/4180PA*	25.98 (2.41)	19 7/8" (505)	21 1/16" (535)	91 3/4" (2318)	14.62 (1.36)	25.98 (2.41)	31.83 (2.96)
5080	15.73 (1.46)	24 13/16" (630)	26" (660)	91 3/4" (2318)	20.82 (1.93)	15.73 (1.46)	39.30 (3.65)
5080AP/5080PA	33.11 (3.08)	52 1/4" (1327)	55 1/8" (1400)	91 3/4" (2318)	20.82 (1.93)	33.11 (3.08)	39.30 (3.65)
5080AP/5080PA*	33.11 (3.08)	25 1/2" (647)	26 11/16" (678)	91 3/4" (2318)	20.82 (1.93)	33.11 (3.08)	39.30 (3.65)
5480	17.00 (1.58)	26 13/16" (681)	28" (660)	91 3/4" (2318)	23.03 (2.14)	17.00 (1.58)	41.95 (3.90)
5480AP/5480PA	35.64 (3.31)	56 1/4" (1429)	59 1/8" (1502)	91 3/4" (2318)	23.03 (2.14)	35.64 (3.31)	41.95 (3.90)
5480AP/5480PA*	35.64 (3.31)	27 1/2" (698)	28 11/16" (729)	91 3/4" (2318)	23.03 (2.14)	35.64 (3.31)	41.95 (3.90)
6080	19.54 (1.82)	30 13/16" (783)	32" (813)	91 3/4" (2318)	27.44 (2.55)	19.54 (1.82)	47.25 (4.39)
6080AP/6080PA	40.71 (3.78)	64 1/2" (1632)	67 1/8" (1705)	91 3/4" (2318)	27.44 (2.55)	40.71 (3.78)	47.25 (4.39)
6080AP/6080PA*	40.71 (3.78)	31 1/2" (800)	32 11/16" (830)	91 3/4" (2318)	27.44 (2.55)	40.71 (3.78)	47.25 (4.39)
8080	17.00 (1.58)	26 13/16" (681)	28" (660)	91 3/4" (2318)	34.55 (3.21)	17.00 (1.58)	63.09 (5.86)
9080	19.54 (1.82)	30 13/16" (783)	32" (813)	91 3/4" (2318)	41.16 (3.82)	19.54 (1.82)	71.05 (6.60)

• Dimensions in parentheses are in millimeters or square meters
*Passive panel in closed position.

MAY 19 2015

Grille Patterns

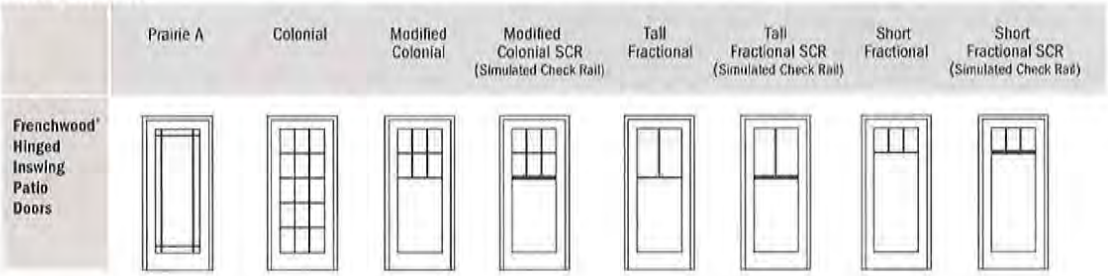

Number of lights and overall pattern varies with panel size.

Patterns are not available in all configurations.

Specified equal light and custom patterns are also available.

For more information on divided lights see page 11.

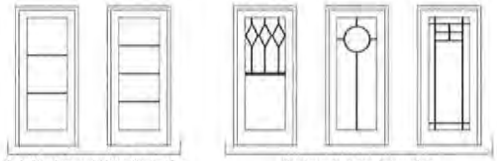

Specified Equal Light Examples Custom Pattern Examples

Frenchwood® Hinged Inswing Patio Door Details

Scale 1½" (38) = 1'-0" (305) – 1:8

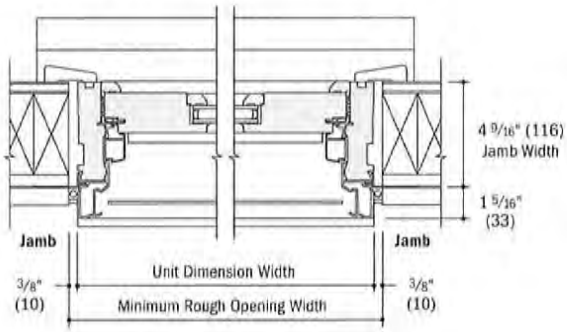

Horizontal Section
Stationary

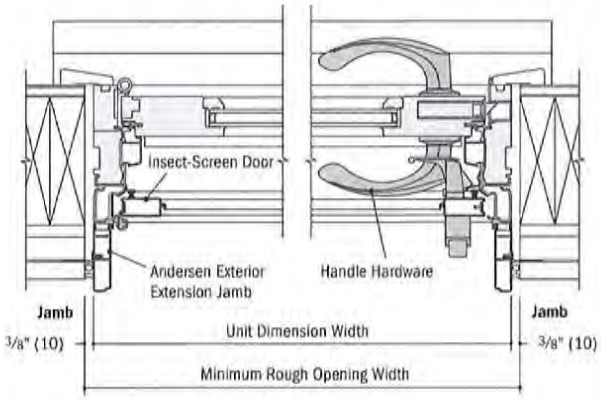

Horizontal Section
Active

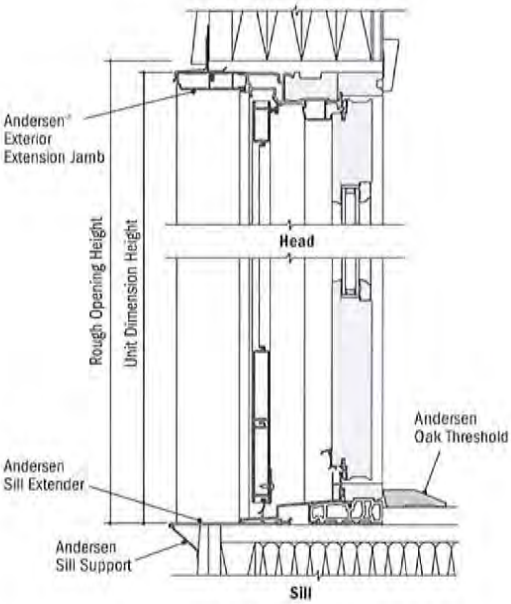

Vertical Section

- 4 9/16" (116) jamb width measurement is from backside of installation flange.
- Light-colored areas are parts included with door. Dark-colored areas are additional Andersen® parts required to complete door assembly as shown.
- **Rough openings may need to be increased to allow for use of building wraps, flashing, sill panning, brackets, fasteners or other items. See installation information on page 285.**
- Details are for illustration only and are not intended to represent product installation methods or materials. Refer to product installation guides at andersenwindows.com.
- Dimensions in parentheses are in millimeters.

MAY 19 2015

FRENCHWOOD® HINGED PATIO DOORS — INSWING

Frenchwood® Hinged Inswing Patio Door Details

Scale 1½" (38) = 1'-0" (305) – 1:8

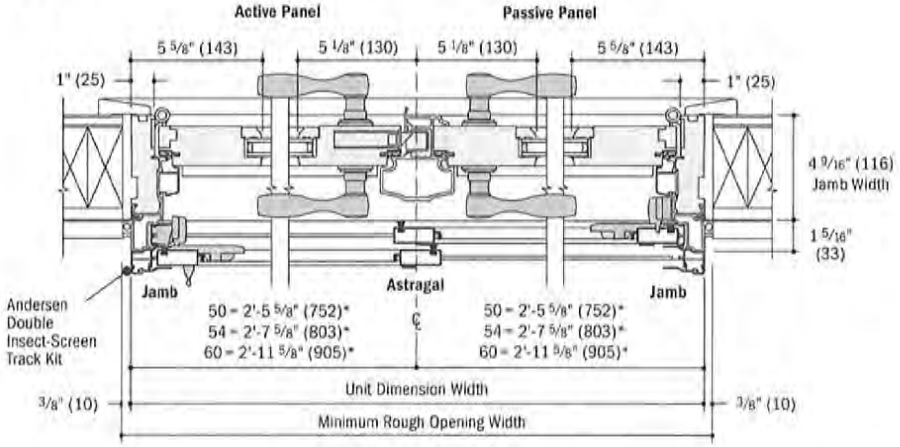

Horizontal Section
Two-Panel

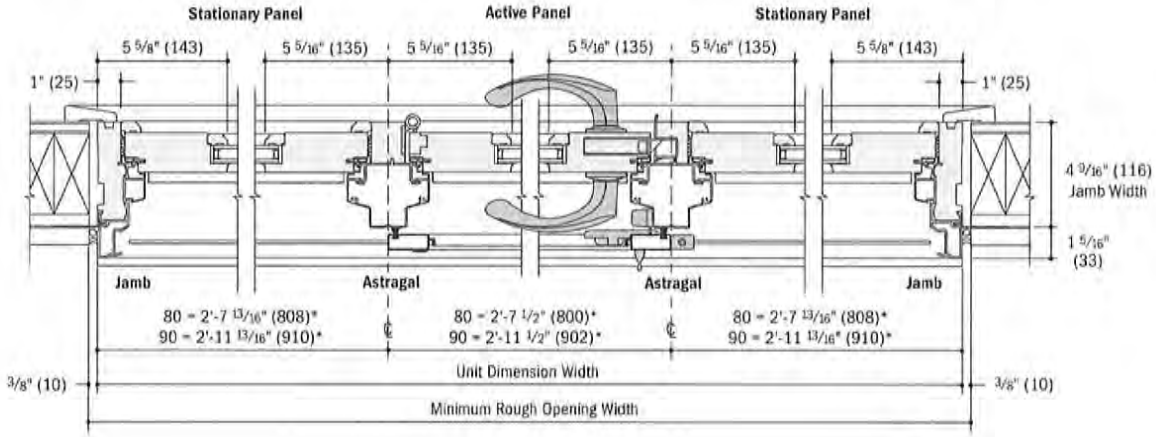

Horizontal Section
Three-Panel

Ramped Sill Detail

Scale 1½" (38) = 1'-0" (305) – 1:8

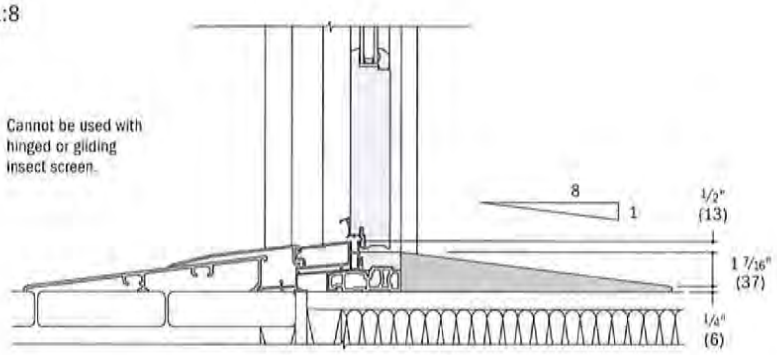

Vertical Section

- 4 9/16" (116) jamb width measurement is from backside of installation flange.
- Light-colored areas are parts included with door. Dark-colored areas are additional Andersen® parts required to complete door assembly as shown.
- **Rough openings may need to be increased to allow for use of building wraps, flashing, sill panning, brackets, fasteners or other items. See installation information on page 285.**
- Details are for illustration only and are not intended to represent product installation methods or materials. Refer to product installation guides at andersenwindows.com.
- Dimensions in parentheses are in millimeters.

*Dimension indicates location of astragal centerline.

MAY 1 0 2015

Clear Opening Details

Scale 1½" (38) = 1'-0" (305) – 1:8

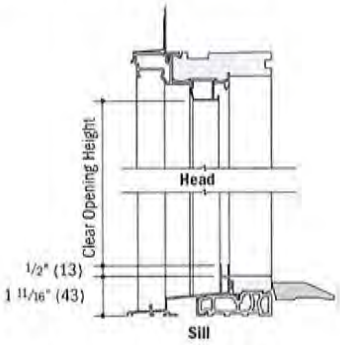

Vertical Section

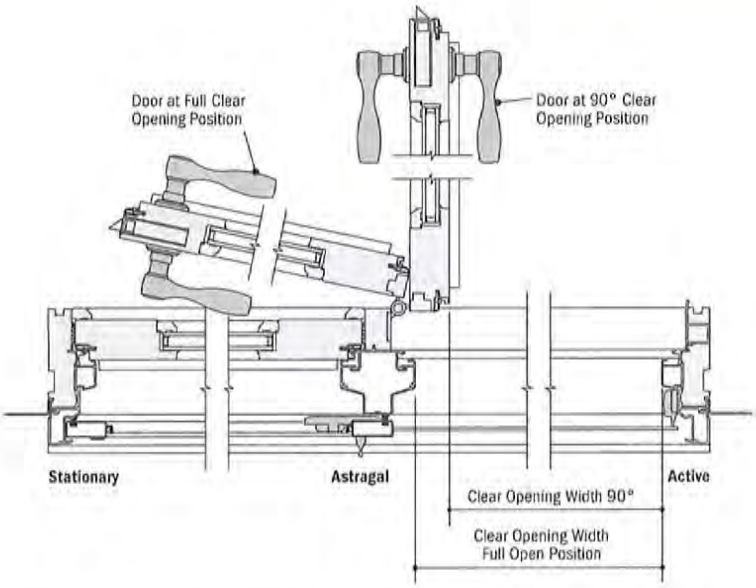

Horizontal Section
Two-Panel, Stationary and Active (open)

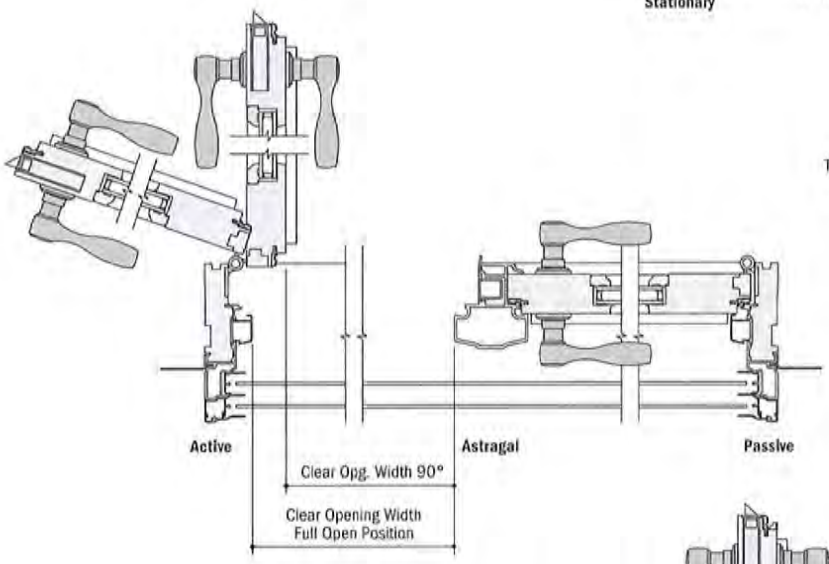

Horizontal Section
Two-Panel, Active (open) and Passive (closed)

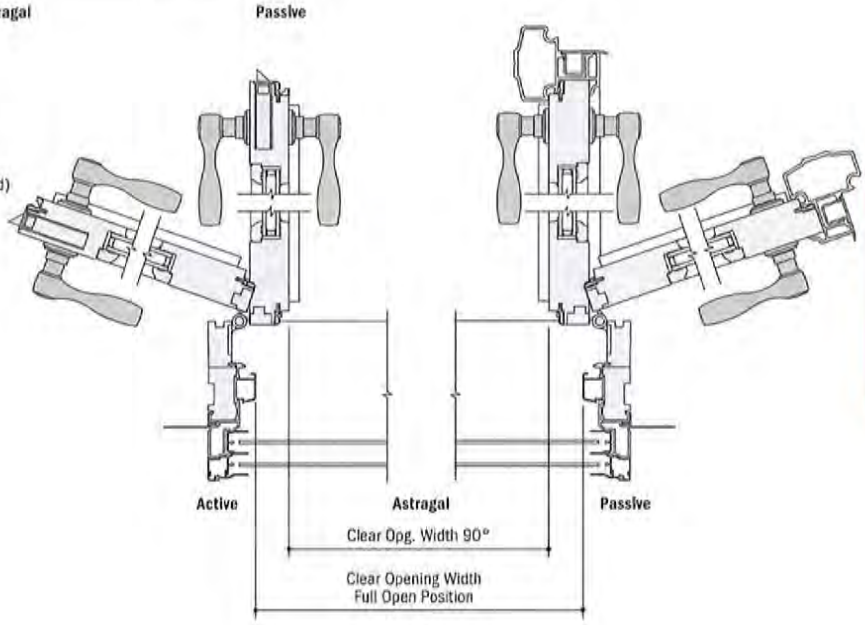

Horizontal Section
Two-Panel, Active (open) and Passive (open)

- Light-colored areas are parts included with door. Dark-colored areas are additional Andersen® parts required to complete door assembly as shown.
- **Rough openings may need to be increased to allow for use of building wraps, flashing, sill panning, brackets, fasteners or other items. See installation information on page 285.**
- Details are for illustration only and are not intended to represent product installation methods or materials. Refer to product installation guides at andersenwindows.com.
- Dimensions in parentheses are in millimeters.

MAY 19 2015

FRENCHWOOD® HINGED PATIO DOORS — INSWING

Interior Extension Jambs

Use of interior extension jambs or drywall return will restrict panel operation on jamb hinged patio doors. Jamb hinged patio doors must be installed flush to the interior to achieve full panel operation.

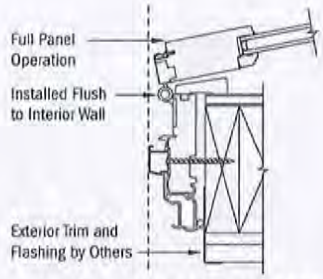

Jamb Hinged Patio Door in 2 x 6 Wall without Extension Jambs

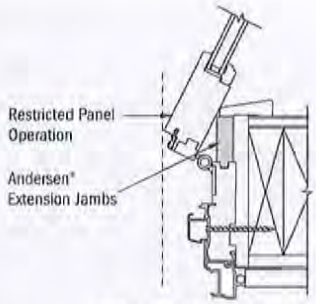

Jamb Hinged Patio Door in 2 x 6 Wall with Extension Jambs

Vertical Joining Detail

Scale 1½" (38) = 1'-0" (305) – 1:8

Overall Door Dimension Width

Sum of individual door widths plus 3/16" (5) for each join.

Overall Rough Opening Width

Overall door dimension width plus ¾" (19).

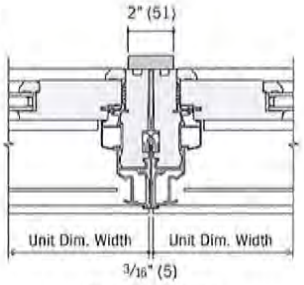

Horizontal Section
Frenchwood® Hinged Inswing to Frenchwood Hinged Inswing

Vertical LVL Joining Detail

Scale 1½" (38) = 1'-0" (305) – 1:8

Overall Door Dimension Width

Sum of individual door widths plus ¾" (19) for each join.

Overall Rough Opening Width

Overall door dimension width plus ¾" (19).

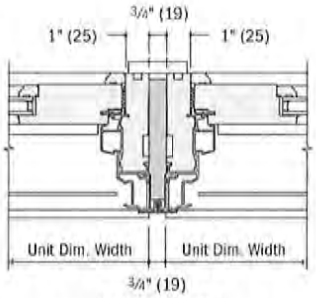

Horizontal Section
Frenchwood® Hinged Inswing to Frenchwood Hinged Inswing

Andersen does not recommend joining of hinge jamb to hinge jamb. For more joining information see the combination design section starting on page 255.

Separate Rough Openings Detail

Scale 1½" (38) = 1'-0" (305) – 1:8

To meet structural requirements or to achieve a wider joined appearance, doors may be installed into separate rough openings having vertical support (by others) in combination with Andersen® exterior filler and exterior vinyl trim.

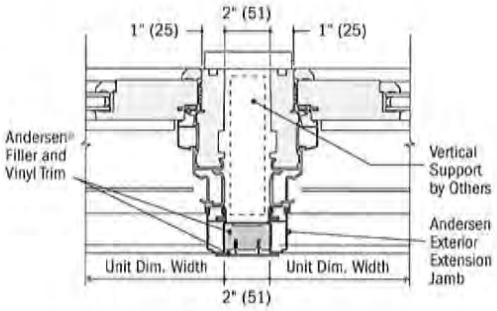

Horizontal Section
Frenchwood® Hinged Inswing and Frenchwood Hinged Inswing

- Light-colored areas are parts included with door. Dark-colored areas are additional Andersen® parts required to complete door assembly as shown.
- **Rough openings may need to be increased to allow for use of building wraps, flashing, sill panning, brackets, fasteners or other items. See installation information on page 285.**
- Details are for illustration only and are not intended to represent product installation methods or materials. Refer to product installation guides at andersenwindows.com.
- Andersen recommends installation of doors into separate rough openings. Consult with an architect or structural engineer regarding minimum requirements for structural support members between adjacent rough openings.
- Dimensions in parentheses are in millimeters.

MAY 19 2015

Andersen WINDOWS • DOORS

FOLDING OUTSWING DOORS

CUSTOM SIZING!
in ⅛" (3) increments

SECTION REFERENCE

Styles & Size Ranges..... 188
Door Details..... 189-190
Performance Data..... 267
Warranty..... 287

Dimensions in parentheses are in millimeters.

MAY 19 2015

FOLDING OUTSWING DOORS

FEATURES

When closed, these doors create a stately wall of light. When open, they transform a room into a gateway to the world outside. With standard or custom panel designs, configurations up to 48' (14630) wide and operating modes that let you open the doors from the left, right or center, Andersen® folding outswing doors will impress even the most demanding customers.

Frame

Ⓐ Heavy-duty extruded aluminum cladding protects the exterior from the elements. Both frame and panels are available with wood exteriors as a special product request.

Ⓑ The engineered wood frame members are treated with a water-repellent wood preservative for long-lasting* protection and performance.

Traditional

Contemporary

Panel

The aluminum clad panel has a dual weatherstrip design at the bottom and along the panel edges, providing an airtight seal. Available in a traditional style with a tall bottom rail and a contemporary style with equal stiles and rails.

Sill

Three sill options are available:

Ⓒ The standard sill, which offers a PG 30 rating for sizes up to 24' (7315) wide and 10' (3048) tall, is available in painted gray or painted dark bronze.

Ⓓ The flush track option places the track even with the finished floor.

Ⓔ The low-profile option provides easy accessibility. Available in painted gray or dark bronze.

Standard

Flush Track

Low Profile

EXTERIOR

INTERIOR

WOOD SPECIES

PAINTED OPTIONS

Naturally occurring variations in grain, color and texture of wood make each door one-of-a-kind. All wood interiors are unfinished unless a painted option is specified.

HARDWARE FINISHES

Distressed bronze and oil rubbed bronze are "living" finishes that will change with time and use.

HARDWARE OPTIONS[1] *Bold name denotes finish shown.*

YUMA®

Distressed Bronze
Distressed Nickel

ENCINO®

Distressed Bronze
Distressed Nickel

ANVERS®

Bright Brass
Oil Rubbed Bronze
Satin Nickel

NEWBURY®

Antique Brass
Bright Brass
Brushed Chrome
Oil Rubbed Bronze
Polished Chrome
Satin Nickel

COVINGTON™

Antique Brass
Bright Brass
Oil Rubbed Bronze

WHITMORE®

Antique Brass
Bright Brass
Oil Rubbed Bronze
Satin Nickel

ALBANY

Black
Gold Dust
Stone
White

TRIBECA®

Stone
White

* Visit andersenwindows.com/warranty or contact your Andersen supplier for details on our limited warranties.

** Actual wood is Sapele, a non-endangered species of mahogany, grown in Africa, with color and characteristics similar to American mahoganies.

† Hardware sold separately.

Dimensions in parentheses are in millimeters.

Printing limitations prevent exact duplication of colors and finishes. See your Andersen supplier for actual color and finish samples.

Tribeca and Albany hardware are zinc diecast with powder-coated durable finish. Other hardware is solid forged brass. Mix-and-match interior and exterior style and finish options are available. Bright brass and satin nickel finishes feature a 10-year limited warranty.

MAY 19 2015

FOLDING OUTSWING DOORS

Folding Outswing Door Panel and Size Ranges

Scale 1/8" = 1'-0" (1:96)

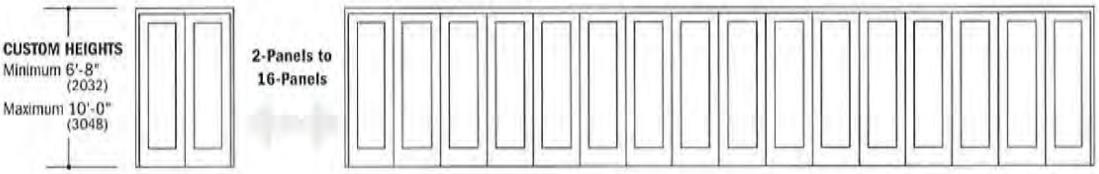

Custom sized in 1/8" (3) increments. Contact your Andersen supplier for additional dimensions and specifications.

Doors open to the exterior. Traditional panel shown, see page 187 for additional panel styles.

CUSTOM WIDTHS

Number of Panels	Minimum to Maximum
2-Panel	3'-2 1/4" (972) to 6'-8 1/8" (2035)
3-Panel	4'-8 3/8" (1438) to 9'-11 1/4" (3029)
4-Panel	6'-3 1/8" (1927) to 13'-2 1/4" (4020)
5-Panel	7'-9" (2362) to 16'-5 5/8" (5020)
6-Panel	9'-9 1/8" (2975) to 19'-8 1/4" (6013)

Number of Panels	Minimum to Maximum
7-Panel	10'-9 1/4" (3283) to 22'-11 7/8" (7007)
8-Panel	12'-4 1/2" (3772) to 26'-3 1/8" (8004)
9-Panel	13'-9 5/8" (4207) to 29'-6 1/2" (9004)
10-Panel	15'-4 1/8" (4693) to 32'-9 1/8" (10004)
11-Panel	16'-9 1/8" (5128) to 36'-0 1/4" (10992)

Number of Panels	Minimum to Maximum
12-Panel	18'-5 1/8" (5617) to 39'-4 1/8" (11992)
13-Panel	19'-10 1/4" (6052) to 42'-7 1/8" (12983)
14-Panel	21'-5 5/8" (6537) to 45'-10 1/2" (13983)
15-Panel	22'-10 1/4" (6966) to 48'-0" (14630)
16-Panel	24'-4 1/8" (7439) to 48'-0" (14630)

- "Minimum to Maximum" door width dimensions refers to frame to frame dimension.
- Dimensions in parentheses are in millimeters.

Panel Configurations

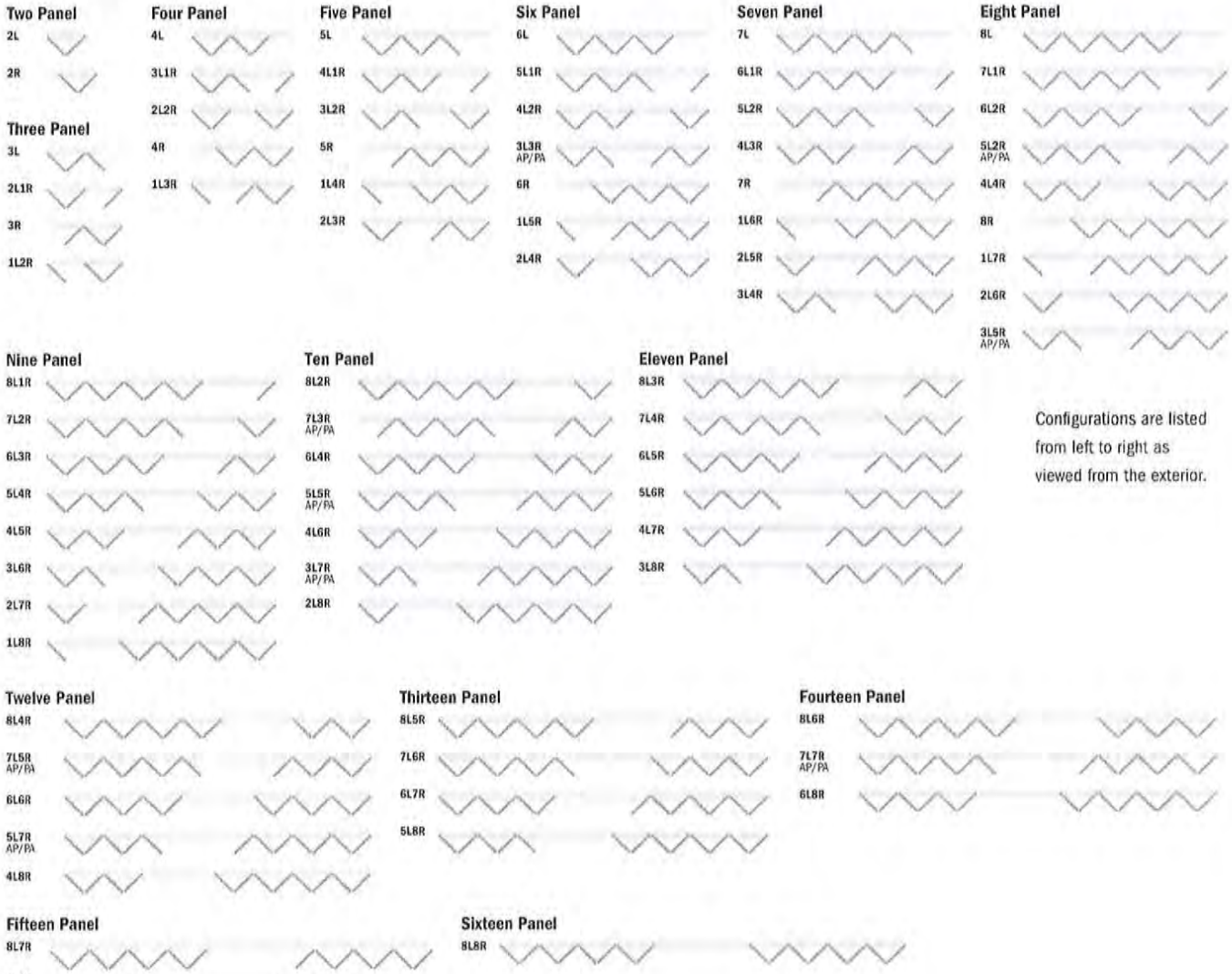

Configurations are listed from left to right as viewed from the exterior.

MAY 19 2015

Design Criteria

To allow for proper performance and operation, verify the structural integrity of the header such that the maximum deflection with live and dead loads is limited to the lesser of L/750 of the span and ¼" (6). The maximum weight per panel with Low-E4®, SmartSun™ or Sun glass is 200 pounds or 90 kg. Weights using alternate glazings will need to be provided by Andersen.

Construction

The standard construction of the folding outswing door is an aluminum clad exterior with a rich wood interior. Clad folding door details are shown. Wood folding doors are also available, visit andersenwindows.com/foldingdoors for more information.

Folding Outswing Doors, Traditional/Contemporary Panel Details

Scale 1½" (38) = 1'-0" (305) – 1:8

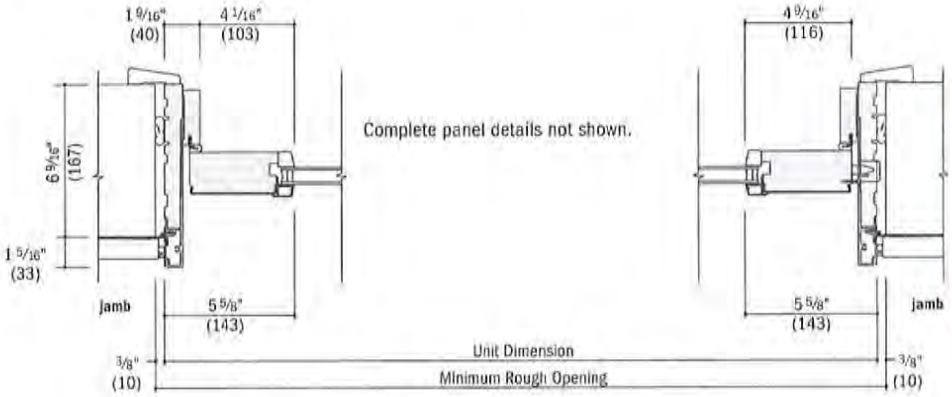

Horizontal Section
Stationary Jamb/Operating Jamb

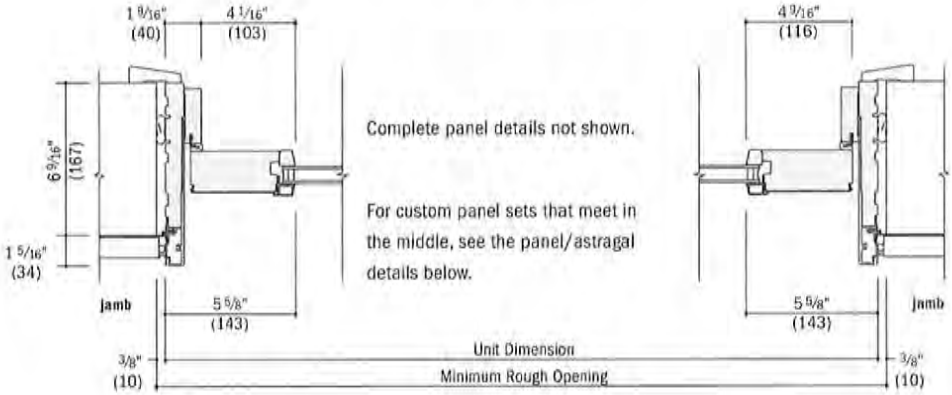

Horizontal Section
Stationary Jamb/Stationary Jamb

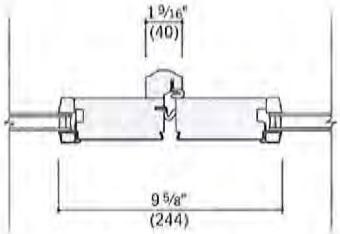

Horizontal Section
Astragal, Leading/Leading

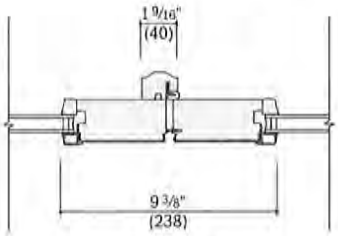

Horizontal Section
Astragal, Leading/Active

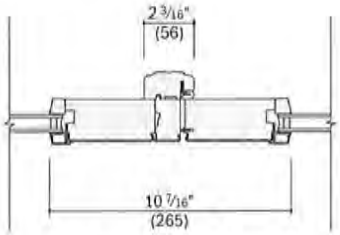

Horizontal Section
Astragal, Passive/Active

- 6 9/16" (167) jamb width measurement is from backside of installation flange to inside edge of door frame.
- Light-colored areas are included with the door unit. Dark-colored areas are additional Andersen® parts required to complete door assembly as shown and must be specified.
- **Rough openings may need to be increased to allow for use of building wraps, flashing, sill panning, brackets, fasteners or other items. See installation information on page 285.**
- Details are for illustration only and are not intended to represent complete or appropriate product installation methods or materials for application. Refer to product installation guide.
- Dimensions in parentheses are in millimeters.
- Clad folding door details are shown. Wood folding door details are available at andersenwindows.com/foldingdoors.

MAY 1 9 2015

FOLDING OUTSWING DOORS

Folding Outswing Doors, Traditional Panel Details

Scale 1½" (38) = 1'-0" (305) – 1:8

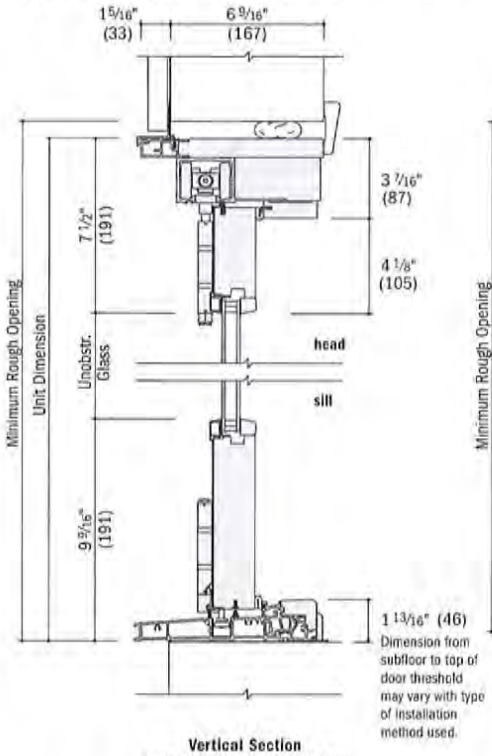

Vertical Section
Traditional Panel, Standard Sill

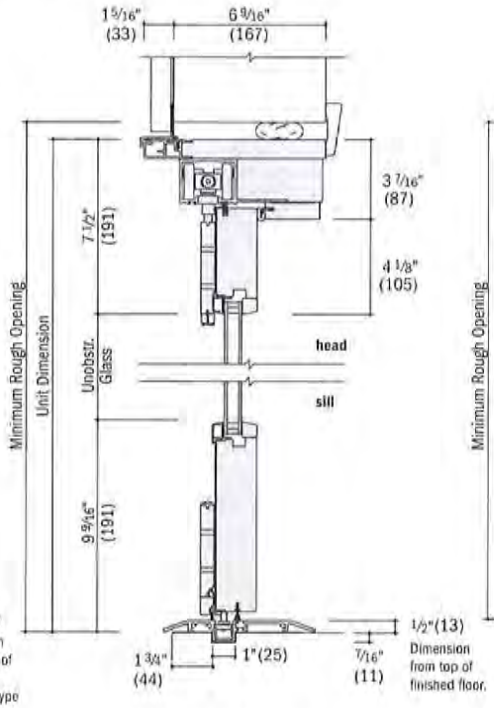

Vertical Section
Traditional Panel, Low Profile Threshold

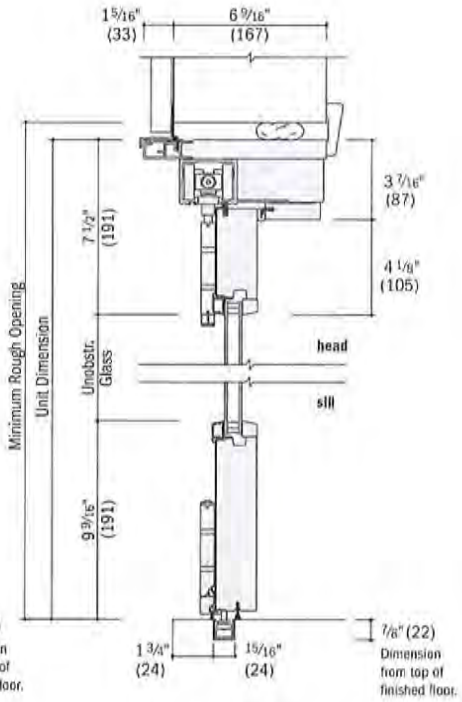

Vertical Section
Traditional Panel, Flush Sill (Track-In-Floor)

Folding Outswing Doors, Contemporary Panel Details

Scale 1½" (38) = 1'-0" (305) – 1:8

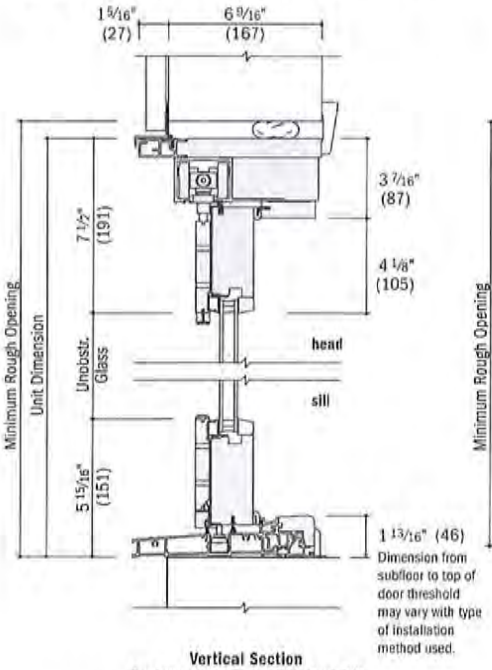

Vertical Section
Contemporary Panel, Standard Sill

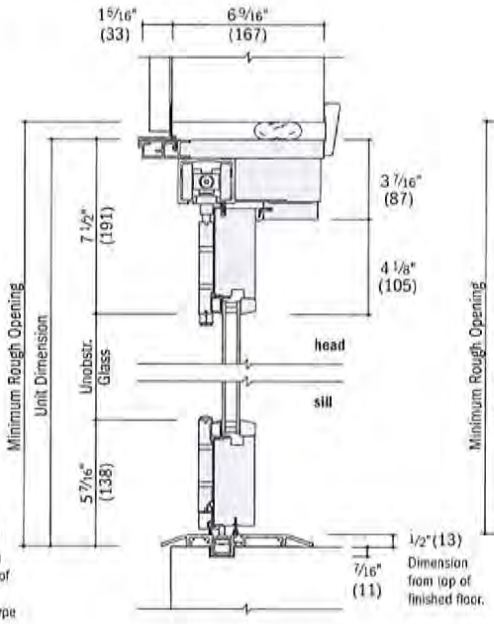

Vertical Section
Contemporary Panel, Low Profile Threshold

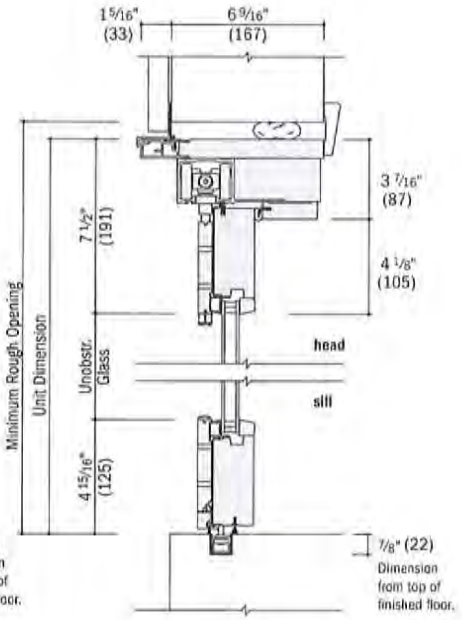

Vertical Section
Contemporary Panel, Flush Sill (Track-In-Floor)

- 6 9/16" (167) jamb width measurement is from backside of installation flange to inside edge of door frame.
- Light-colored areas are included with the door unit. Dark-colored areas are additional Andersen® parts required to complete door assembly as shown and must be specified.
- **Rough openings may need to be increased to allow for use of building wraps, flashing, sill panning, brackets, fasteners or other items. See Installation Information on page 285.**
- Details are for illustration only and are not intended to represent complete or appropriate product installation methods or materials for application. Refer to product installation guide.
- Dimensions in parentheses are in millimeters.
- Clad folding door details are shown. Wood folding door details are available at andersenwindows.com/foldingdoors.

MAY 19 2015

HERRICK RESIDENCE

557 4TH STREET EAST
SONOMA, CA 95476

1 VICINITY MAP
N.T.S.

ZONING

GENERAL PLAN LAND USE DESIGNATION		CENTRAL-EAST
ZONING		R-L
PROPOSED BUILDING		
MAIN FLOOR		1590 S.F.
UPPER FLOOR		1476 S.F.
	TOTAL	3066 S.F.
PROPOSED POOL HOUSE		850 S.F.
PROPOSED GARAGE		350 S.F.
	TOTAL	4266 S.F.
LOT SIZE (205.0' X 60.0')		12300 S.F.
MAX. ALLOWABLE LOT COVERAGE		40%
PERCENT OF PROPOSED LOT COVERAGE		22.68%
MAX. ALLOWABLE FLOOR AREA RATIO (FAR)		.35
PROPOSED FAR = 4266 / 12300 =		.34
MAX. BUILDING HEIGHT		30'-0"
PROPOSED BUILDING HEIGHT		25'-0"

INDEX OF DRAWINGS

A0.01	COVER SHEET
A1.01	SITE PLAN
L1.01	LANDSCAPE PLAN
A2.01	EXTERIOR ELEVATIONS
A4.01	ARCHITECTURAL DETAILS
A4.02	SIDING DETAILS
A4.03	ROOFING DETAILS

N.T.S.

STRATA
STRATEGIC DESIGN STUDIO

ARCHITECTURE

PO Box 1207
Sonoma, California 95476
T 707.935.7944
F 707.935.6618
www.STRATAap.com

LOCATION

557 FOURTH STREET EAST
SONOMA, CA 95476

REVISIONS

1	--	--
2	--	--
3	--	--
4	--	--

HERRICK RESIDENCE
APN #: 018-271-016-000

SCHEMATIC DESIGN

SHEET TITLE

SITE PLAN

CHECKED BY: BJ

DRAWN BY: cMh

SCALE: N.T.S.

DATE: May 19, 2015

PROJECT NO. 192-15

A0.01

DRAWING NO.

MAY 19 2015

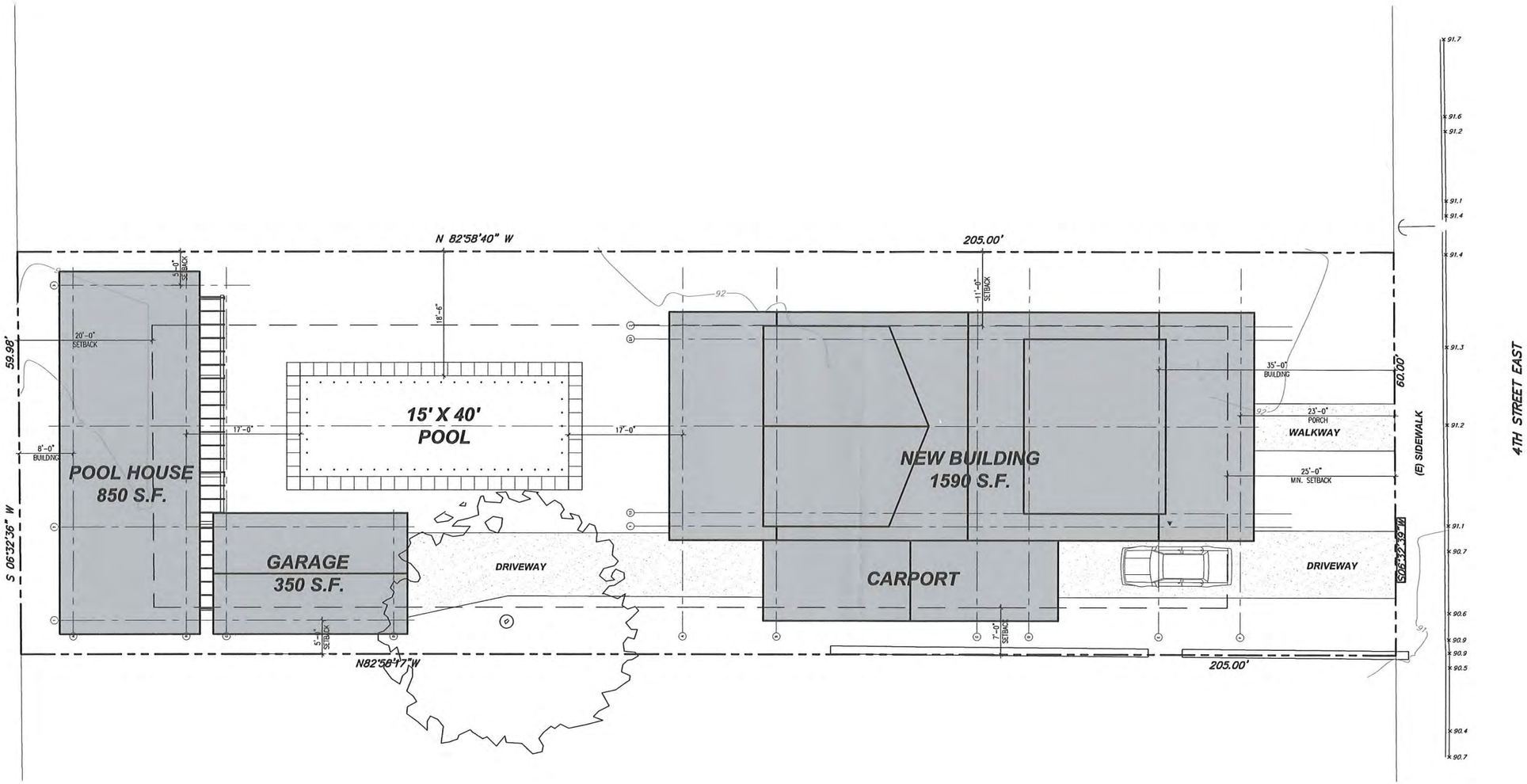

1 SITE PLAN

1/8" = 1'-0"

N

N.T.S.

STRATA
STRATEGIC DESIGN STUDIO

ARCHITECTURE

PO Box 1207
Sonoma, California 95476
T 707.935.7944
F 707.935.6618
www.STRATAap.com

LOCATION

557 FOURTH STREET EAST
SONOMA, CA 95476

REVISIONS

1 -- --
2 -- --
3 -- --
4 -- --

HERRICK RESIDENCE
APN #: 018-271-016-000

SCHEMATIC DESIGN

SHEET TITLE

SITE PLAN

CHECKED BY: BJ

DRAWN BY: cMh

SCALE: 1/8" = 1'-0"

DATE: May 19, 2015

PROJECT NO. 192-15

A1.01

DRAWING NO.

MAY 19 2015

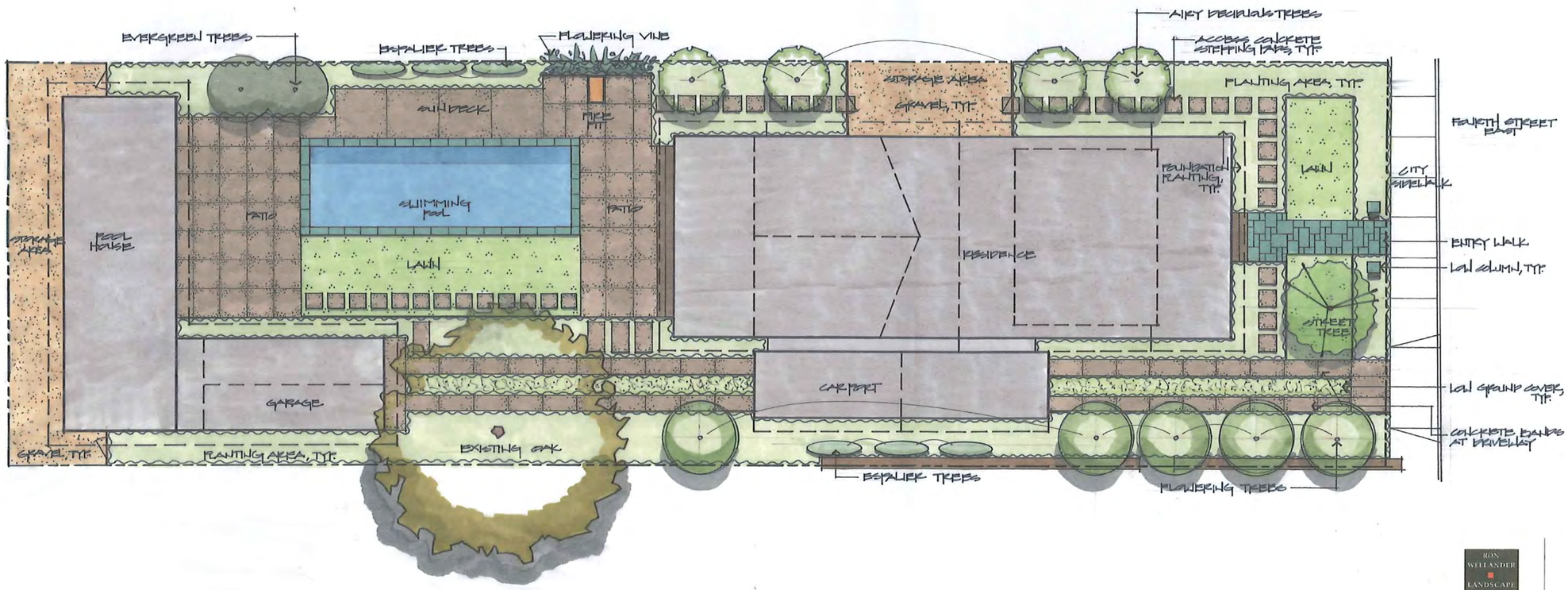

RON WELLANDER
LANDSCAPE ARCHITECT
DESIGN
CONSTRUCTION MANAGEMENT
707.480.2748
rww1149@sbcglobal.net
SONOMA, CALIFORNIA

1 LANDSCAPE PLAN

1/8" = 1'-0"

HARDSCAPE

PERMEABLE GRAVEL MULCH	1,307 S.F.	= 27%
IMPERVIOUS	2,693 S.F.	= 73%
TOTAL HARDSCAPE	3,700 S.F.	

N

N.T.S.

STRATA A.P.
STRATEGIC DESIGN STUDIO

ARCHITECTURE

PO Box 1207
Sonoma, California 95476
T 707.935.7944
F 707.935.6618
www.STRATAap.com

LOCATION

557 FOURTH STREET EAST
SONOMA, CA 95476

REVISIONS

1 -- --
2 -- --
3 -- --
4 -- --

HERRICK RESIDENCE
APN #: 018-271-016-000

SCHEMATIC DESIGN

SHEET TITLE

LANDSCAPE PLAN

CHECKED BY: BJ
DRAWN BY: cMh
SCALE: 1/8" = 1'-0"
DATE: May 19, 2015

PROJECT NO. 192-15

L1.01

DRAWING NO.

MAY 19 2015

MAIN HOUSE - EAST

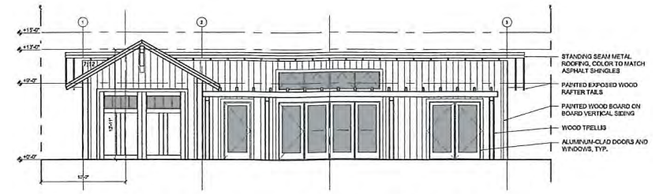

DETACHED GARAGE / POOL HOUSE - EAST

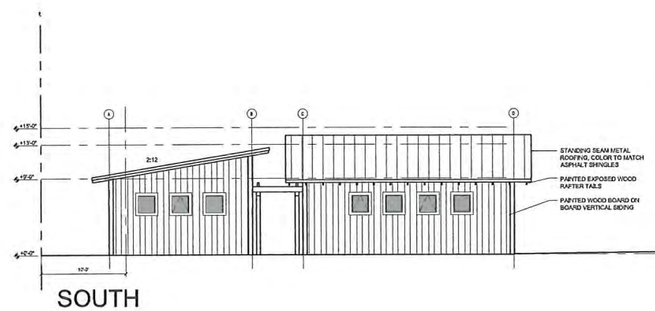

SOUTH

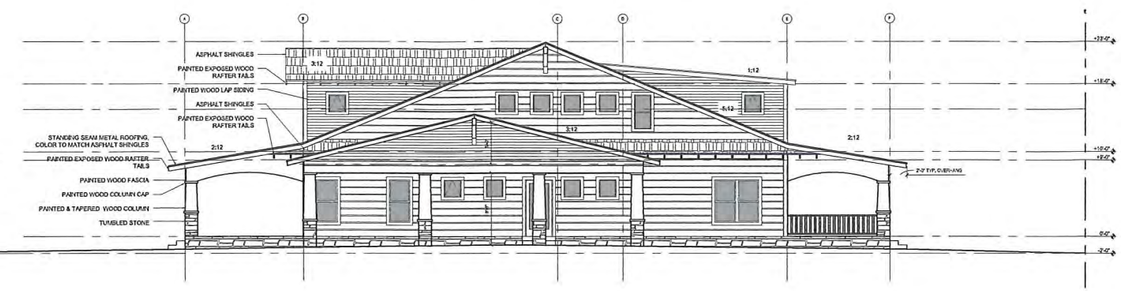

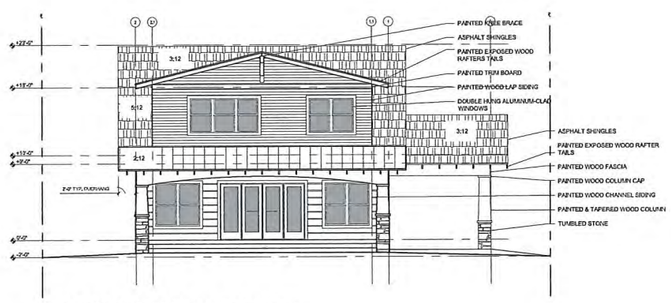

MAIN HOUSE - WEST

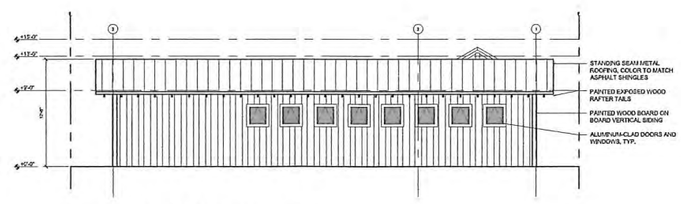

POOL HOUSE - WEST

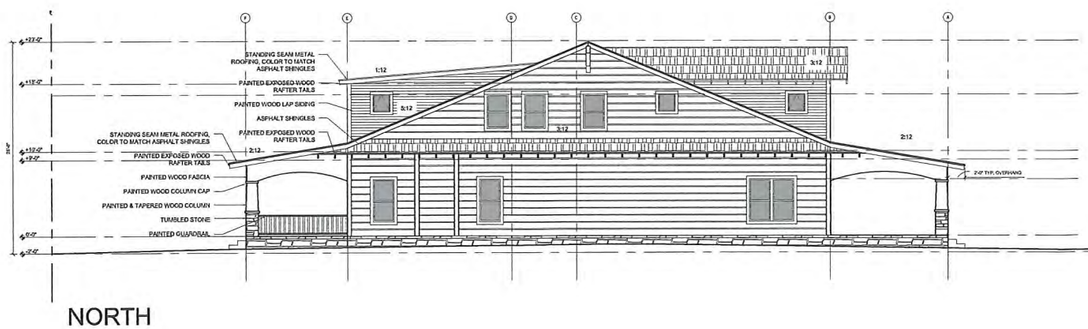

NORTH

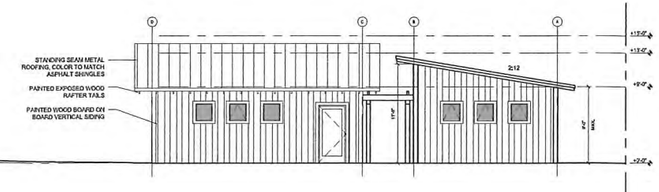

1 EXTERIOR ELEVATIONS

1/8" = 1'-0"

N.T.S.

STRATA AP
STRATEGIC DESIGN STUDIO

ARCHITECTURE

PO Box 1207
Sonoma, California 95476
T 707.935.7944
F 707.935.6618
www.STRATAap.com

LOCATION

557 FOURTH STREET EAST
SONOMA, CA 95476

REVISIONS

1 --
2 --
3 --
4 --

HERRICK RESIDENCE
APN #: 018-271-016-000

SCHEMATIC DESIGN

SHEET TITLE

EXTERIOR ELEVATIONS

CHECKED BY: BJ
DRAWN BY: cMh
SCALE: 1/8" = 1'-0"
DATE: May 19, 2015

PROJECT NO. 192-15

A2.01

DRAWING NO.

MAY 19 2015

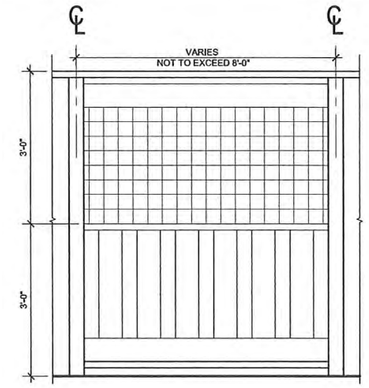

7 TYP. PARTIAL TRANSPARENT PARTIAL OPAQUE FENCE
3/4" = 1'-0"

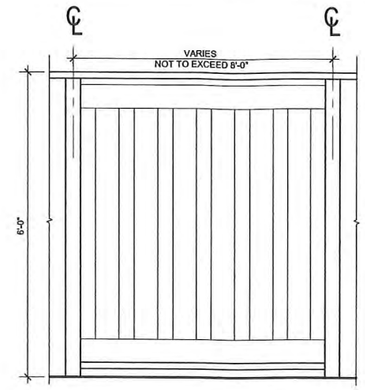

4 TYP. OPAQUE FENCE
3/4" = 1'-0"

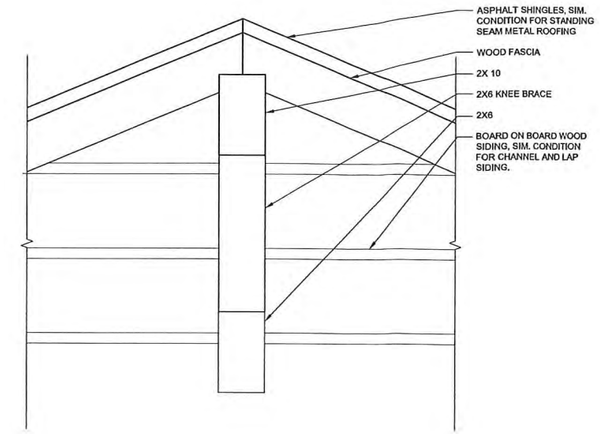

2 TYP. ENLARGED KNEE BRACE ELEVATION
1 1/2" = 1'-0"

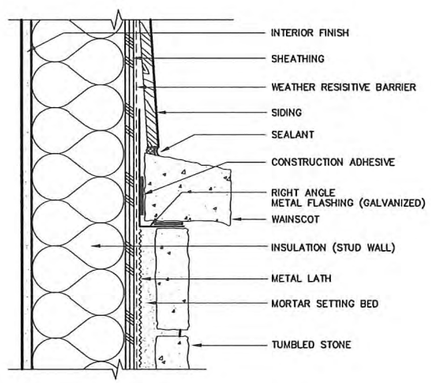

6 TYP. STONE CAP DETAIL
3" = 1'-0"

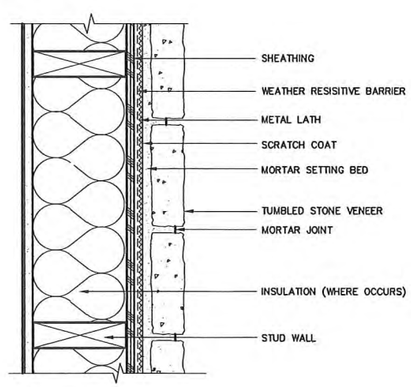

5 TYP. STONE DETAIL
3" = 1'-0"

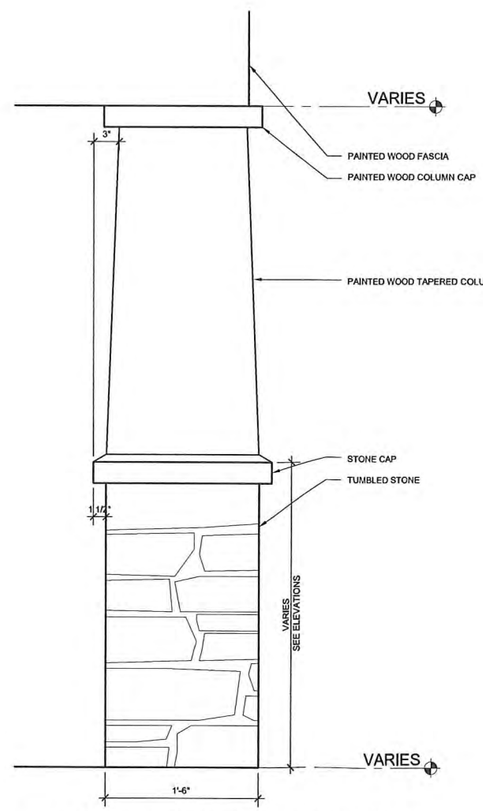

3 TYP. TAPERED COLUMN DETAIL
1 1/2" = 1'-0"

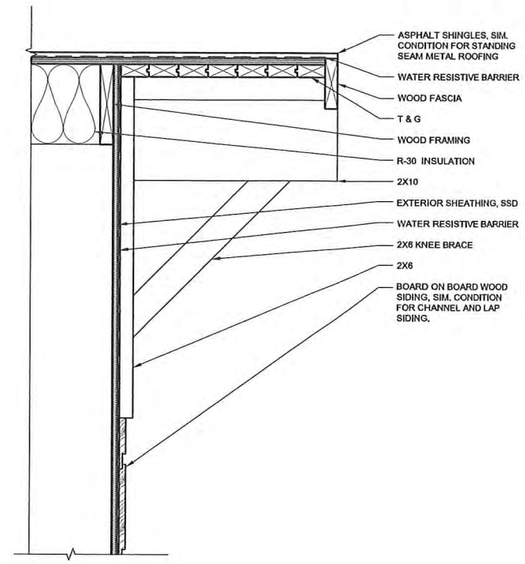

1 TYP. ENLARGED KNEE BRACE DETAIL
1 1/2" = 1'-0"

N.T.S.

STRATA AP
STRATEGIC DESIGN STUDIO

ARCHITECTURE

PO Box 1207
Sonoma, California 95476
T 707.935.7944
F 707.935.6618
www.STRATAap.com

LOCATION

557 FOURTH STREET EAST
SONOMA, CA 95476

REVISIONS

1 -- --
2 -- --
3 -- --
4 -- --

HERRICK RESIDENCE
APN #: 018-271-016-000

SCHEMATIC DESIGN

SHEET TITLE

ARCHITECTURAL DETAILS

CHECKED BY: BJ
DRAWN BY: cMh
SCALE: AS NOTED
DATE: May 19, 2015

PROJECT NO. 192-15

A4.01
DRAWING NO.

MAY 19 2015

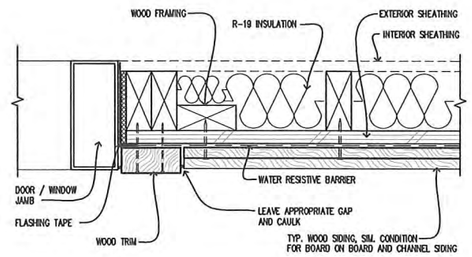

9 DOOR / WINDOW JAMB

SCALE: 3"=1'-0"

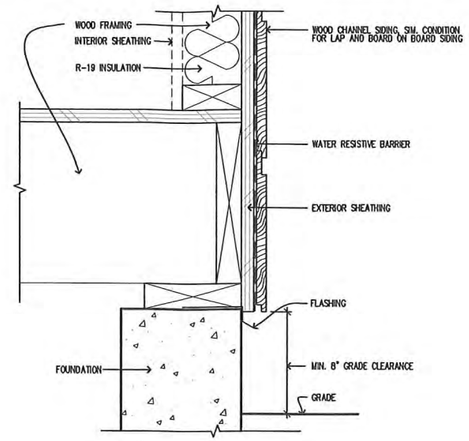

6 GRADE CLEARANCE

SCALE: 3"=1'-0"

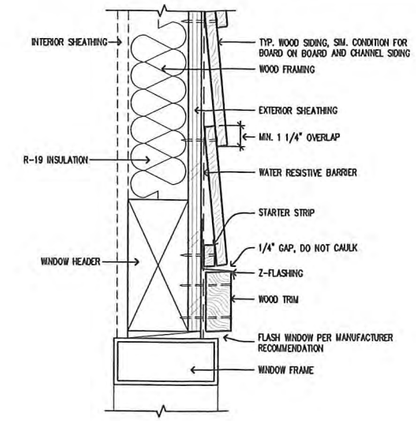

3 WINDOW/DOOR HEAD

SCALE: 3"=1'-0"

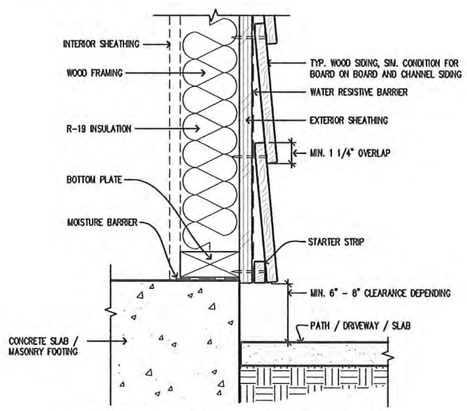

8 HARDSCAPE CLEARANCES, DECKS, PORCHES, PATIOS, WALKWAYS, ROOFS, ETC.

SCALE: 1/2"=1'-0"

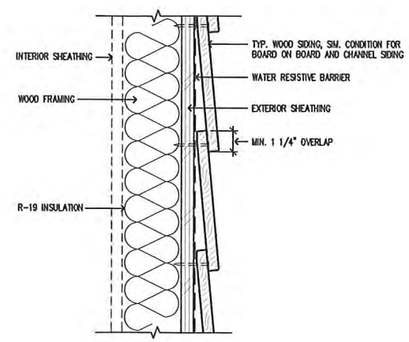

5 HORIZONTAL LAP VIEW

SCALE: 3"=1'-0"

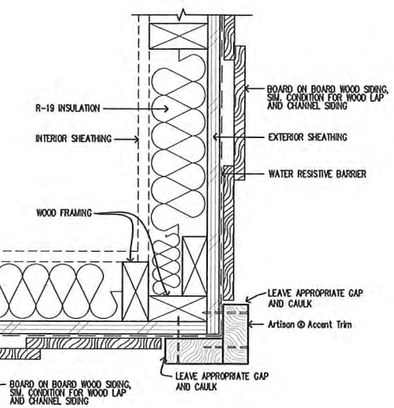

2 OUTSIDE CORNER

SCALE: 3"=1'-0"

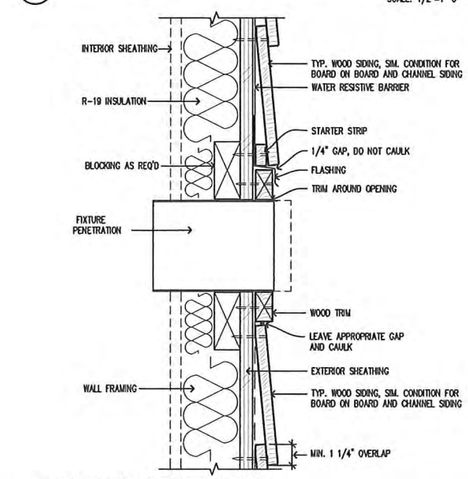

7 FIXTURE PENETRATION

SCALE: 3"=1'-0"

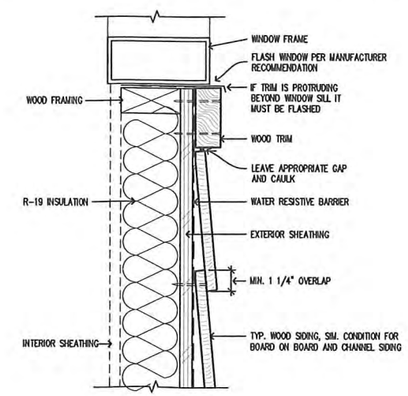

4 WINDOW SILL

SCALE: 3"=1'-0"

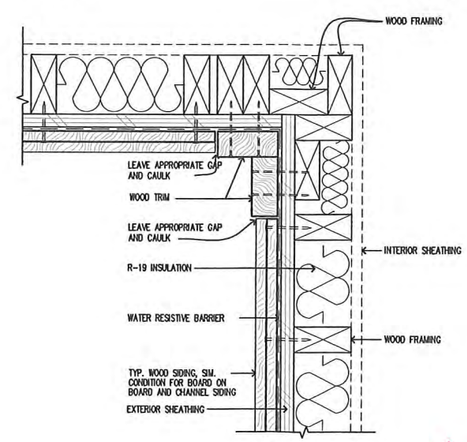

N.T.S.

1 INSIDE CORNER

SCALE: 3"=1'-0"

STRATA STRATEGIC DESIGN STUDIO

ARCHITECTURE

PO Box 1207
Sonoma, California 95476
T 707.935.7944
F 707.935.6618
www.STRATAap.com

LOCATION

557 FOURTH STREET EAST
SONOMA, CA 95476

REVISIONS

1 -- --
2 -- --
3 -- --
4 -- --

HERRICK RESIDENCE
APN #: 018-271-016-000

SCHEMATIC DESIGN

SHEET TITLE

TYPICAL EXTERIOR SIDING DETAILS

CHECKED BY: BJ

DRAWN BY: cMh

SCALE: 3" = 1'-0"

DATE: May 19, 2015

PROJECT NO. 192-15

A4.02

DRAWING NO.

MAY 19 2015

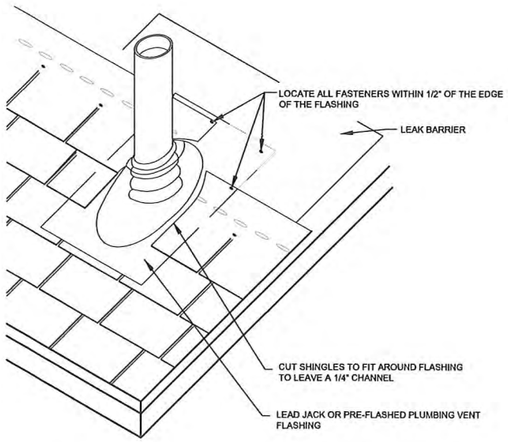

NOTES:
1.) INSTALL 24" LEAK BARRIER TARGET SHEET.
2.) DO NOT FACE NAIL THE PLUMBING VENT FLASHING.

7 TYP. ASPHALT SHINGLE PENETRATION

1 1/2" = 1'-0"

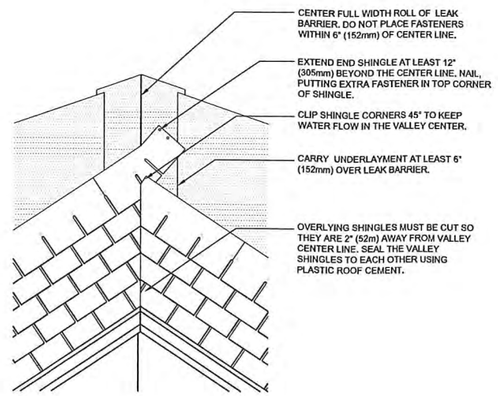

5 ASPHALT SHINGLE DETAIL

3" = 1'-0"

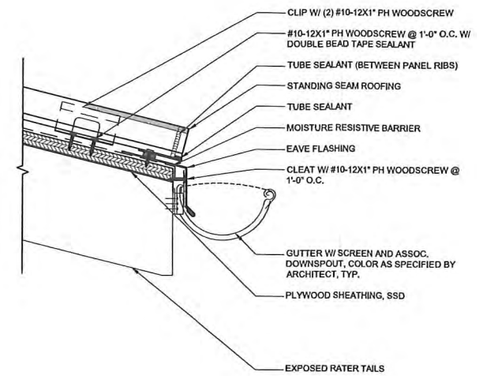

2 STANDING SEAM EAVE DETAIL

3" = 1'-0"

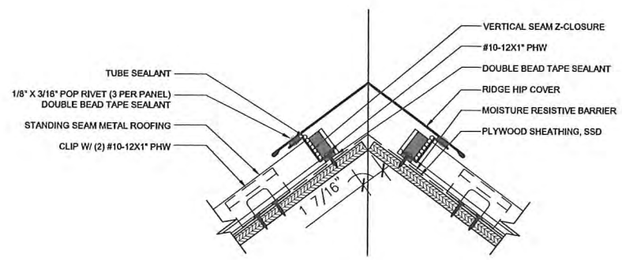

4 STANDING SEAM RIDGE DETAIL

3" = 1'-0"

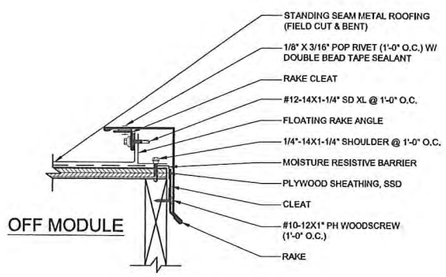

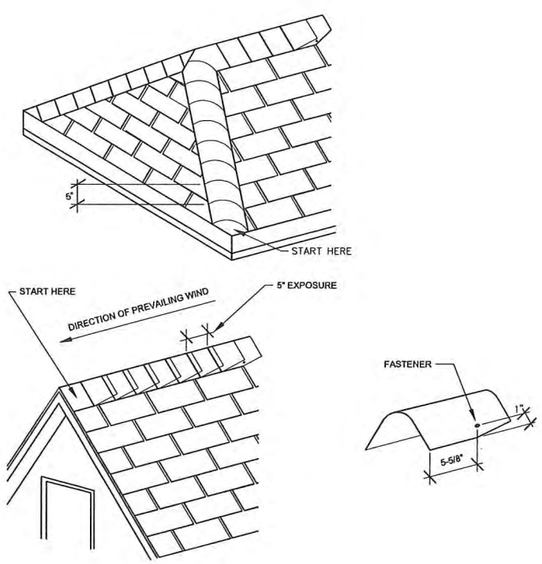

6 TYP. ASPHALT SHINGLE DETAIL

3" = 1'-0"

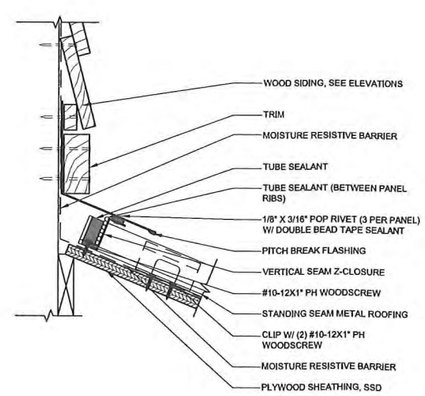

3 STANDING SEAM PITCH BREAK DETAIL

3" = 1'-0"

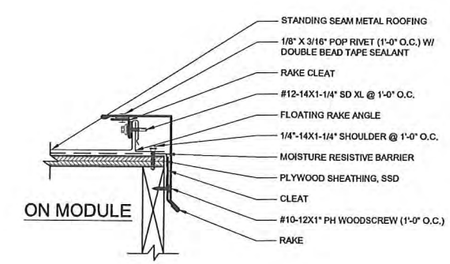

1 STANDING SEAM RAKE DETAIL

3" = 1'-0"

N.T.S.

STRATA AP
STRATEGIC DESIGN STUDIO

ARCHITECTURE

PO Box 1207
Sonoma, California 95476
T 707.935.7944
F 707.935.6618
www.STRATAap.com

LOCATION

557 FOURTH STREET EAST
SONOMA, CA 95476

REVISIONS

1 --
2 --
3 --
4 --

HERRICK RESIDENCE
APN #: 018-271-016-000

SCHEMATIC DESIGN

SHEET TITLE

ROOFING DETAILS

CHECKED BY: BJ
DRAWN BY: cMh
SCALE: 1/8" = 1'-0"
DATE: May 19, 2015

PROJECT NO. 192-15

A4.03

DRAWING NO.

MAY 19 2015

City of Sonoma
Design Review and Historic Preservation Commission
Agenda Item Summary

DRHPC Agenda Item:	**7**
Meeting Date:	**06/16/15**

Applicant	**Project Location**
Gwen Stanley (Ross Drulis Cusenbery)	32 Patten Street

Historical Significance

- ☐ Listed on National Register of Historic Places, including Sonoma Plaza district
- ☐ Listed on California Register of Historic Resources
- ☐ Listed within Local Historic Resources Survey (Potentially Significant)
- ☐ Over 50 years old
  Year built: 1983

Request

Consideration of design review and new signs for a commercial building (3 Badge Beverage Company).

Summary

***Background*:** On September 11, 2014, the Planning Commission approved an application for a Use Permit to utilize the Old Sonoma Firehouse for offices and storage for The Other Guys (3 Badge Beverage Company) (see attached conditions of approval).

At this time the applicant is proposing design review modifications to the existing building and three new signs.

Design Review: The building improvements requiring design review consist of the following: 1) six new painted bay doors on the south facing elevation; 2) a new painted wood slat gate and privacy screen on the west facing elevation; 3) a new corrugated metal roof on the existing main building at the emergency generator enclosure on the west facing elevation: 4) a new steel canopy with matching corrugated metal roofing on the west facing elevation; 5) remove the existing antennae from the roof and repair the cupola and wood trim as required; 6) four new types of light fixtures; and 7) new paint colors.

Exterior Colors: The applicant has indicated that a color scheme using colors that both improve the scenic approach to the Plaza and evoke the historic use of the building along with its new brand identity have been put forward for the DRHPC's consideration. The property wall, building walls, and gutters are proposed to be painted Benjamin Moore Monterey White (HC-27). The six new apparatus bay doors and existing entry doors are proposed to be painted Valspar Cinnamon Sunset (VR007A). The new wood slat gate and privacy screen are proposed to be stained Benjamin Moore Kendall Charcoal. The exterior fascia and soffits are proposed to be painted C2 James Brown (C2-840). The deck railing and posts and door trim are proposed to be painted C2 Burlap (C2-892). Color samples are attached, brush outs have been applied to the building, and a color board will be presented by the applicants at the upcoming DRHPC meeting.

Note: the applicant has stated that the existing window frames will remain the same color as the current color, which is white.

Exterior Lighting: As indicted on the attached Signage and Lighting plan, four types of external lights are proposed: Light Fixture #1; Light fixture #2; Light Fixture #3, and Light Fixture #4. One each Light Fixture #1 (Maxlite MLVPW14LED50CP) is proposed on the south facing elevation. Fourteen each Light Fixture #2 (Maxlit MLVPC14LED50CP) are proposed on the south facing elevation between each deck post on both the first and second stories. One each Light Fixture #4 (Refurbished antique fire station warning light) is proposed on the south facing elevation. Six each Light Fixture #3 (RAB Lighting GN1LED26YCS) are proposed on the west facing elevation (two of the lights are proposed to illuminate Sign #3). Four each Light Fixture #2 are proposed on the east facing elevation between each deck post on both the first and second stories. As of the date of the staff report the applicant has not indicated the proposed illumination hours for the external lighting. Normal business hours are from 7: 30 a.m. to 6:30 p.m. daily.

Findings for Project Approval: For projects within the Historic Overlay zone or a Local Historic District and projects involving historically significant resources, the Design Review and Historic Preservation Commission may approve an

application for architectural review, provided that the following findings can be made (§19.54.080.G):

1. The project complies with applicable policies and regulations, as set forth in this Development Code, other City ordinances, and the General Plan.
2. On balance, the project is consistent with the intent of applicable design guidelines set forth in the Development Code.
3. The project responds appropriately to the context of adjacent development, as well as existing site conditions and environmental features.
4. The project will not impair the historic character of its surroundings.
5. The project substantially preserves the qualities of any significant historic structures or other significant historic features on the site.
6. The project substantially complies with the applicable guidelines set forth in Chapter 19.42 (Historic preservation and infill in the Historic Zone).
7. The project substantially complies with any applicable preservation plan or other guidelines or requirements pertaining to a local historic district as designated through section 19.42.020.
8. The project substantially complies with the applicable Secretary of Interior Standards and Guidelines for the Treatment of Historic Properties.

Sign Review: Three new wall signs are proposed for the business. Sign #1 is proposed on the existing property wall (facing Patten Street). The sign is 38.5 square feet in area (14 inches tall by 33 feet wide). The sign would be constructed of painted metal letters, Benjamin Moore metallic glaze liquid silver (PT-100) in color. Illumination is not proposed. Sign #2 is proposed on the south facing elevation (between the bay doors and the office portion of the building). The sign is 8.7 square feet in area (36 inches tall by 37 inches wide). The sign would be constructed of raised painted metal letters, Benjamin Moore metallic glaze liquid silver (PT-100) in color. Illumination is proposed in the form of one each RAB lighting GN1LED26YACS (light fixture #3). The applicant is proposing to illuminate the sign from sundown until 10 p.m. Normal business hours are from 7:30 a.m. to 6:30 p.m. daily. Sign #3 is proposed on the west facing elevation (facing Broadway). The sign is 23.75 square feet in area (5 feet tall by 4 feet 9 inches wide). The sign would be constructed of a dark patina steel plate with painted metal letters, Benjamin Moore metallic glaze liquid silver (PT-100) in color. Illumination is proposed in the form of two each RAB lighting GN1LED26YACS (light fixture #3). The applicant is proposing to illuminate the sign from sundown until 10 p.m. Normal business hours are from 7:30 a.m. to 6:30 p.m. daily.

Wall Sign Regulations (§18.20.180): Wall signs projecting over the property line, including a light box or other part thereof, shall not exceed a thickness of 12 inches. The proposal is consistent with this requirement.

Aggregate Sign Area: Based on the property's frontage on Patten Street (243 feet), and secondary frontage on Broadway (75 feet) the maximum aggregate sign area allowed for the parcel is 118.2 square feet. The total aggregate sign area for the property would be ±70.95 square feet, including the three wall signs (70.95 square feet in area). The proposal is consistent with this requirement.

Size Limitations: No sign shall exceed 48 square feet in total area. The proposal is consistent with this requirement in that the wall signs would not exceed and area of 48 square feet.

Number of Signs: Only one monument sign is allowed per property, and a maximum of two signs are normally permitted for any one business (§18.16.010). If a parcel has a primary frontage greater than 200 feet, an additional sign shall be permitted. The proposal complies with these requirements in that there would be three signs for the business including the three wall signs.

Basic Findings: In order to approve any application for sign review, the review authority must make all of the following findings:

1. The proposed signage complies with applicable policies and regulations, as set forth in this sign ordinance (except for approved variances), all other city ordinances, and the general plan;

2. On balance, the proposed signage is consistent with the purpose and intent expressed by SMC 18.04.010 and the applicable guidelines for signs set forth by SMC 18.60.010, Appendix A – Design guidelines for signs; and,

3. The proposed signage is harmonious and consistent overall with the location of the site, including adjacent and surrounding development and its environmental features.

Other permits required: In addition to the requirements of this title, the project shall be in conformance with applicable requirements of the 2013 California Building Code and where required by the 2013 California Building Code, shall obtain a

building permit prior to installation.

Commission Discussion

Design Review and Historic Preservation Commission Action

❑ Approved ❑ Disapproved ❑ Referred to: _____ ❑ Continued to: _____

Roll Call Vote: _____ Aye _____ Nay _____ Abstain _____ Absent

DRHPC Conditions or Modifications

Attachments

1. *Planning Commission Conditions of Project Approval*
2. *Project narrative*
3. *Manufacturer lighting specifications*
4. *Exterior elevations*
5. *Signage and lighting information*
6. *Exterior material board information*
7. *Paint colors*

cc: Ross Drullis Cusenbery Architecture
Attn: Gwen Stanley
18294 Sonoma Highway
Sonoma, CA 95476

Mary Martinez, via will call at City Hall

Patricia Cullinan, via email

Alice Duffee, via email

SLHP Historic Survey, via email

FINAL

City of Sonoma Planning Commission

CONDITIONS OF PROJECT APPROVAL

TOG Office Use Permit

32 Patten Street

September 11, 2014

1. The office use shall operate in conformance with the project narrative and approved site plan, floor plans and building elevations, except as modified by these conditions and the following:

    a. On-site retail sales and wine tasting to the public shall be prohibited.
    b. On-site storage shall be ancillary and subordinate to the office use. Wholesaling, warehousing and distribution as defined under Section 19.92.020 of the Development Code shall be prohibited.

    Enforcement Responsibility: *Planning Department, Building Department*
    Timing: *Prior to issuance of a building permit; Ongoing*

2. All Building Department requirements shall be met, including applicable Building Code requirements related to disabled access (ADA) and firewall/occupancy separation between the office and storage areas. A building permit shall be required.

    Enforcement Responsibility: *Building Department*
    Timing: *Prior to construction; Prior to operation*

3. All Fire Department requirements shall be met.

    Enforcement Responsibility: *Fire Department; City Engineer; Building Department*
    Timing: *Prior to issuance of a building permit*

4. As normally required, any exterior building modifications that go beyond maintenance and/or in-kind replacement of exterior materials shall be subject to review and approval by the DRHPC. In addition, any proposed business signage and/or new exterior color scheme (i.e., repainting) shall be subject to review and approval by the DRHPC.

    Enforcement Responsibility: *Planning Department; DRHPC*
    Timing: *Prior to installation of signage or exterior building modifications*

18294
Sonoma Highway
Sonoma
CA 95476

TEL 707 996 8448
FAX 707 996 8542

ARCHITECTURE

RossDrulisCusenbery

May 18, 2015

PROJECT NARRATIVE

Application Type: City of Sonoma Design Review Commission (DRC)
Project Name: The Other Guys Inc., Old Sonoma Fire Station Exterior Building Renovation
Project Location: 32 Patten Street, Sonoma, CA 95476
Project Sponsor: The Other Guys Inc., (Soon: 3 Badge Beverage Corporation)
Project Architect: RossDrulisCusenbery Architecture, Inc., Michael B. Ross, AIA

PROJECT OVERVIEW

The Other Guys Inc. (TOG), a Sonoma based wine and spirits company, purchased the old Sonoma Firehouse located at 32 Patten Street Sonoma CA. TOG has renovated the office portions of the building and relocated their operations from leased space at 35 Maple Street, Sonoma, CA to the 32 Patten Street site. Following the office renovation TOG has begun to rebrand itself as the 3 Badge Beverage Corporation (3 Badge). The 3 Badge brand calls to the Sebastiani family's historic connections with the old Sonoma Firehouse. 3 Badge intents to add exterior signage well as repair and repaint the building exterior in order to both improve the scenic approach to the Plaza and evoke the historic use of the building along with its new brand identity.

3 Badge is requesting DRC approval for the following exterior modifications:

- Misc. exterior building repairs
- New exterior light fixtures
- Exterior color changes
- Signage

SPECIFIC PROJECT DATA

Site Parcel Addresses: 32 Patten Street, Sonoma CA
APN: 018-212-032
Zoning: Downtown District, Mixed Use, Historic Overlay.
Prior Zoning: The project was zoned Commercial in the past. Surrounding properties are Commercial.

BUILDING AREA

First Floor: 7,519 SF - Type V
Second Floor: 2,216 SF - Type V
Total Building Area: 9,735 GSF

DEVELOPMENT FEATURES

MAY 18 2015

Building Setbacks:

Front and street: 10'

Side: none required except when abutting a residential zone

Rear: none required

Garage Setback: 20' from main structure (for residential)

Building Height: 30'

Total Lot Area: 18,375 SF

Existing Building Coverage: 7,519 SF

Allowable Lot Coverage: 70%

Actual Lot Coverage: 40.9%

Allowable FAR: Lot area x 1.20 = 22,050 SF

Actual Building Area: 9,735 SF = FAR compliant

Open Space: 10,856 SF (approximately 59% of site area)

Landscape: Rehabilitate existing perimeter plantings, and trees.

Submitted by:

Michael B. Ross, AIA, NCARB

Principal, CEO

RossDrulisCusenbery Architecture, Inc.

18294 Sonoma Highway

Sonoma, CA

MAY 18 2015

LED VAPORPROOF JELLY JAR

MLVP SERIES

Ceiling Mount

Wall Mount, with drop lens accessory

Full Details of Line Drawings can be found on page 3.

PRODUCT DESCRIPTION:

LED Vaporproof Jelly Jars are designed to replace 100-watt incandescent and 23-watt CFL fixtures with high-quality, long-lasting illumination over doorways, scaffolding, construction sites, fire hydrants and emergency call stations. The lamps are IP66 rated against ingress of dust and pressurized water in harsh environments, and suitable for inverted mounting. They have an L70 lifetime of 50,000 hours.

Constructed with a shortened polycarbonate lens that minimizes light loss, Jelly Jars may be mounted at heights lower than the short-lived fixtures they replace for easier maintenance.

FEATURES:

- Efficacy exceeding 80 lm/W allows replacement of 100W incandescent or 23W CFL
- Wide operating temperature of -30°F-104°F
- 70 CRI min
- Universal 120-277V power supply
- Power Factor > 0.9; THD < 25%
- Rated for 50,000-hour L70lifetime at TM-21 standards, 25°C

CONSTRUCTION:

- Die-cast housing, durable powder coat finish
- IP66 rated
- Suitable for inverted mounting
- Multiple conduit entries for easy wiring
- Flat polycarbonate lens allows for lower mounting heights

MODEL SELECTION (Full list of order codes on pg. 2) — Typical order example: MLVPW14LED50CP

MLVP		14	LED50	CP
FAMILY	**MOUNT**	**POWER, EQUIVALENCY**	**CCT**	**LENS**
MLVP= Vaporproof Jelly Jar	**W=** Wall Mount **C=** Ceiling Mount	**14=** 14W, 100W INC equivalent	**LED50=** 5000K	**CP=** Clear Polycarbonate

ACCESSORIES

ORDER CODE	MODEL NUMBER	DESCRIPTION	IMAGE
74282	MLVPDLWG	14W LED Vaporproof Frosted Drop Lens and Die-Cast Wire Guard, Aluminum Finish	

JUN 08 2015

SPECIFICATIONS:

ITEM	SPECIFICATION	MLVPW14LED50CP DETAILS	MLVPC14LED50CP DETAILS
GENERAL PERFORMANCE	Lumens Delivered (lm)	1,120	
	Efficacy (lm/W)	83	
	CCT	5000K	
	L70 lifetime hours, TM-21 @25°C	50,000	
	Color Rendering Index (CRI)	70	
ELECTRICAL	Input Power (W)	13.45	
	Power Factor	> 0.9	
	Input Voltage (V)	120-277, 50/60Hz	
PHYSICAL	Weight (lbs)	2.95	2.60
	Lens	Clear Polycarbonate	
	Housing	Aluminum	
	Mounting	Gasketed back plate can be mounted to recessed outlet box or direct to surface	
	Operating Temperature	-30°F-104°F	
APPLICATION	Certification	RoHS, cULus, FCC, LM-79, LM-80	
	Environment	IP66	
	Humidity	20% - 85% RH, non condensing	
	Warranty	5 Years	

ORDERING*:

ORDER CODE	MODEL	EFFICACY (lm/W)	OUTPUT (LUMENS)	NOMINAL POWER (WATTS)	CCT	FINISH
74279	MLVPC14LED50CP	83	1,125	14	5000K	Aluminum
74278	MLVPW14LED50CP					

***Please contact your MaxLite representative to order products that don't have order codes listed here.**

CEILING MOUNT LINE DRAWING:

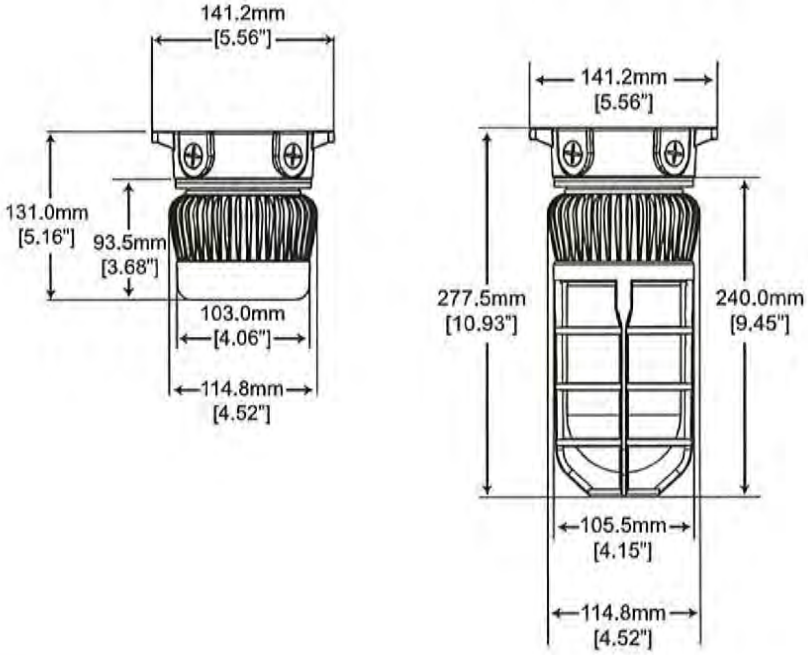

WALL MOUNT LINE DRAWING:

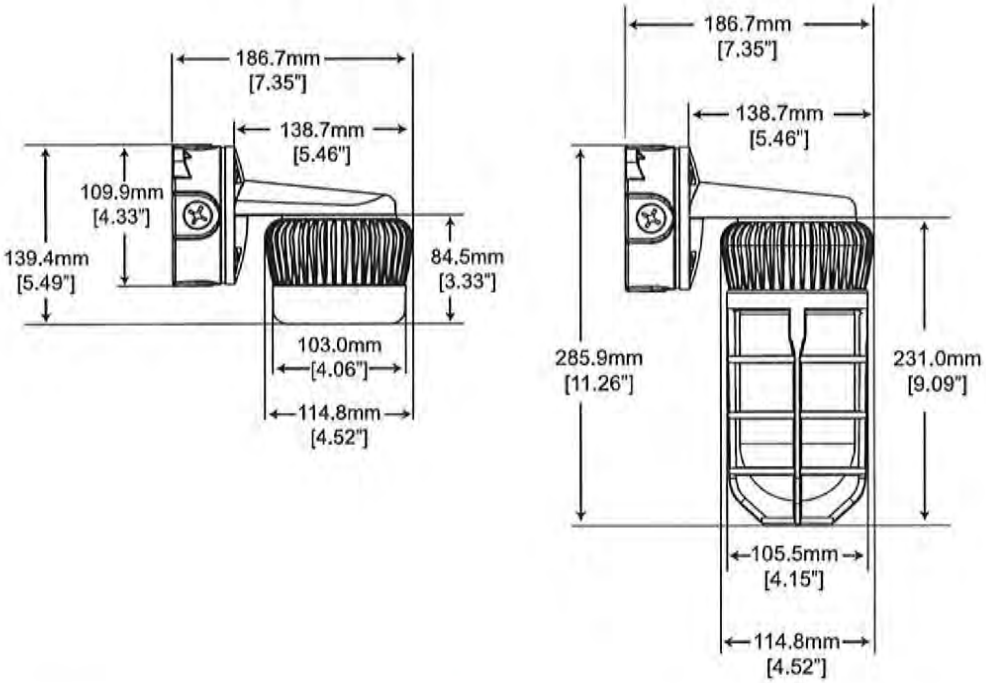

JUN 0 8 2015

GN1LED26YACS

RAB LIGHTING

13 & 26 Watt Angled Cone Shade LED Gooseneck Luminaire designed to match the architecture of Main Street storefronts and building perimeters. LED Gooseneck Cone Shade with 24" Goose Arm Style 1.

Color: Silver

Weight: 11.0 lbs

Project:	Type:
Prepared By:	Date:

Driver Info		LED Info	
Type:	Constant Current	Watts:	26W
120V:	0.25A	Color Temp:	3000K (Warm)
208V:	0.16A	Color Accuracy:	82 CRI
240V:	0.14A	L70 Lifespan:	100,000
277V:	0.12A	Lumens:	1,247
Input Watts:	29W	Efficacy:	43 LPW
Efficiency:	90%		

Technical Specifications

LED Characteristics

Color Accuracy (CRI):

CRI can change due to the fixture color. Please contact the RAB Lighting Design department for more details.

Lifespan:

100,000-hour LED lifespan based on IES LM-80 results and TM-21 calculations.

LED:

Single multi-chip, 26W high-output, long-life LED.

Correlated Color Temp. (Nominal CCT):

3000K

Color Stability:

LED color temperature is warrantied to shift no more than 200K in CCT over a 5 year period.

Color Uniformity:

RAB's range of CCT (Correlated color temperature) follows the guidelines of the American National Standard for Specifications for the Chromaticity of Solid State Lighting (SSL) Products, ANSI C78.377-2008.

Listings

UL Listing:

Suitable for wet locations. Suitable for mounting within 1.2m (4ft) of the ground.

IESNA LM-79 & IESNA LM-80 Testing:

RAB LED luminaires have been tested by an independent laboratory in accordance with IESNA LM-79 and 80, and have received the Department of Energy "Lighting Facts" label.

Sensor Characteristics

Lead Time:

3 weeks expedited shipping. 6 weeks standard shipping.

Construction

Fixture:

The GN1LED26YACS comes with the GOOSE1S arm.

Thermal Management:

Custom heat sink assembly in thermal contact with die-cast aluminum housing for superior heat sinking.

Housing:

Precision die-cast aluminum housing, lens frame and mounting plate.

Gaskets:

High Temperature Silicone

Mounting:

Heavy-duty mounting arm with "O" ring seal and stainless steel screw.

Cold Weather Starting:

The minimum starting temperature is -40°F/-40°C

Finish:

Our environmentally friendly polyester powder coatings are formulated for high-durability and long-lasting color, and contains no VOC or toxic heavy metals. Offers significantly improved gloss retention and resistance to color change.

Green Technology:

Mercury and UV free, and RoHS compliant. Polyester powder coat finish formulated without the use of VOC or toxic heavy metals.

Electrical

Driver:

Constant Current, Class 2, 100-277V, 50/60 Hz, 0.48 A, THD≤20%, PF 97.9%.

Surge Protection:

4kv

Other

Shades:

15" Angled Cone Shade offered.

Equivalency:

The GNLED26 is equivalent in delivered lumens 120W incandescent, 75W MH or 42W CFL.

California Title 24:

Goosenecks complies with 2013 California Title 24 building and electrical codes as a commercial outdoor non-pole-mounted fixture < 30 Watts when used with a photosensor control. Select catalog number PCS900(120V) or PCS900/277 to order a photosensor.

Patents:

The design of the Gooseneck is protected by patents pending in US, Canada, China and Taiwan.

Warranty:

RAB warrants that our LED products will be free from defects in materials and workmanship for a period of five (5) years from the date of delivery to the end user, including coverage of light output, color stability, driver performance and fixture finish. See our full warranty

Country of Origin:

Designed by RAB in New Jersey and assembled in Taiwan.

Trade Agreements Act Compliant:

This product is a product of Taiwan and a "designated country" end product that complies with the Trade Agreements Act.

Copyright © 2014 RAB Lighting Inc. All Rights Reserved Note: Specifications are subject to change at any time without notice

JUN 0 8 2015

BENJAMIN MOORE

HC-27 MONTEREY WHITE

- EXTERIOR STUCCO
- EXTERIOR VENTS, CUPOLA AND NEW DOOR AT APPS BAY AND APPS BAY DOOR AT 1ST EAST
- PERIMETER SITE WALL

MAY 1 8 2015

C2

C2-892 BURLAP

- DECK RAILING AND POSTS.
- WINDOW AND DOOR TRIM ON PATTEN AND 1ST STREET EAST

C2

C2-840 JAMES BROWN

- ALL EXTERIOR FASCIA AND SOFFITS

BENJAMIN MOORE - SOLID STAIN

HC-166 KENDALL CHARCOAL

1484 ASHWOOD MOSS

2113-30 BISON BROWN

979 STAMPEDE

- WOOD SLATS AT BROADWAY APPARATUR DOOR

VALSPAR

VR007A CINNAMON SUNSET

- ALL APPS BAY DOORS
- NEW ENTRY DOOR ON PATTEN STREET
- NEW ENTRY DOOR ON BROADWAY

BENJAMIN MOORE - METALLIC GLAZE

LIQUID SILVER PT-100

SIGNAGE

BENJAMIN MOORE
HC-27 MONTEREY WHITE

BENJAMIN MOORE
METALLIC GLAZE - LIQUID SILVER PT-100

BENJAMIN MOORE
KENDALL CHARCOAL

VALSPAR
VR007A CINNAMON SUNSET

BENJAMIN MOORE
HC-27 MONTEREY WHITE

C2 PAINT
C2-870 JAMES BROWN

C2 PAINT
C2-892 BURLAP

REMOVE EXISTING ANTENNAE FROM ROOF AND REPAIR CUPPOLA AND WOOD TRIMS AS REQUIRED

(E) FLAG POLES AND METAL WALL GUARDS PAINTED METALLIC GREY - *BENJAMIN MOORE MOLTEN METALLICS BRONZE 60*

SIGN #1 (DR4-A)

EXISTING PROPERTY WALL PAINTED

NEW STEEL CANOPY WITH MATCHING CORRUGATED METAL ROOFING

NEW PAINTED WOOD SLAT GATE AND PRIVACY SCREEN:
BENJAMIN MOORE SOLID STAIN, HC 166 KENDALL CHARCOAL

NEW CORRUGATED METAL ROOF FROM METAL SALES: W50 WEATHERED COPPER, REPLACING (E) ASPHALT ROOF THROUGH OUT. NEW CORRUGATED METAL ROOF AT (E) EMERGENCY GENERATOR ENCLOSURE .

NEW APPARATUS BAY DOORS PAINTED

LIGHT FIXTURE #1 (DR4)

LIGHT FIXTURE #4 RECLAIMED ANTIQUE FIRE STATION WARNING LIGHT

SIGN #2 (DR4-B)

LIGHT FIXTURE #3 (DR3)

LIGHT FIXTURE #2(DR4) BETWEEN EACH DECK POST

SOUTH ELEVATION - VIEW FROM PATTEN STREET
PRIMARY STREET FRONTAGE

1/4" = 1'-0"

EXISTING VIEW FROM PATTEN STREET

JUNE 16 2015

EXTERIOR ELEVATION

RossDrulisCusenbery ARCHITECTURE

DESIGN REVIEW - EXTERIOR MATERIAL AND COLOR PALETTE

3 BADGE BEVERAGE CORPORATION ***DR1***

JUN 1 2 2015

C2 PAINT
C2-870 JAMES BROWN

BENJAMIN MOORE
HC-27 MONTEREY WHITE

C2 PAINT
C2-892 BURLAP

EAST ELEVATION - VIEW FROM FIRST STREET EAST
SECONDARY STREET FRONTAGE

1/4" = 1'-0"

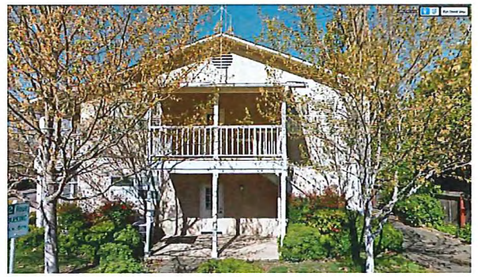

EXISTING VIEW FROM FIRST STREET EAST

EXTERIOR ELEVATION

JUNE 16 2015

RossDrulisCusenbery ARCHITECTURE

DESIGN REVIEW - EXTERIOR MATERIAL AND COLOR PALETTE

3 BADGE BEVERAGE CORPORATION ***DR3***

JUN 1 2 2015

BENJAMIN MOORE

HC-27 MONTEREY WHITE

C2 PAINT

C2-870 JAMES BROWN

VALSPAR

VR007A CINNAMON SUNSET

BENJAMIN MOORE - SOLID STAIN

HC-166 KENDALL CHARCOAL

1484 ASHWOOD MOSS

2113-30 BISON BROWN

979 STAMPEDE

C2 PAINT

C2-892 BURLAP

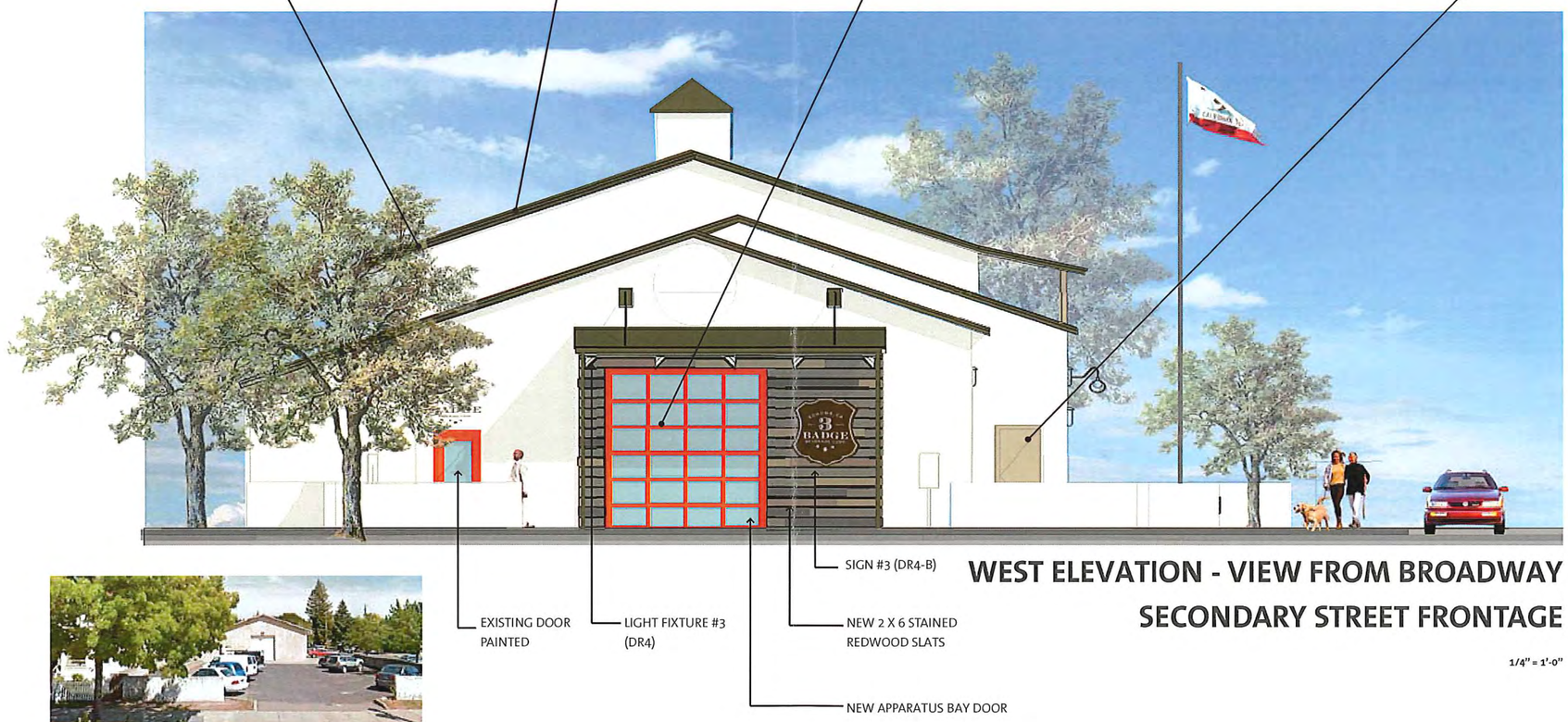

WEST ELEVATION - VIEW FROM BROADWAY

SECONDARY STREET FRONTAGE

1/4" = 1'-0"

EXISTING VIEW FROM BROADWAY

EXTERIOR ELEVATION

MAY 18 2015

MAY 15 2015

A

SIGN #1

Sign area - 35sf

Font height - 14"

Lettering - Painted metal letters, 1 1/2" deep x 14" tall,

PAINT COLOR
BENJAMIN MOORE

METALLIC GLAZE - LIQUID SILVER PT-100

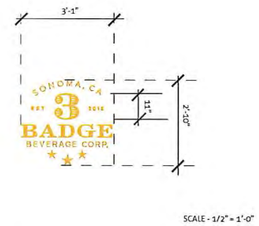

B

SIGN #2

Sign area - 7sf

Font height OF "3"- 11"

Lettering - Raised Painted metal letters

PAINT COLOR

BENJAMIN MOORE

METALLIC GLAZE - LIQUID SILVER PT-100

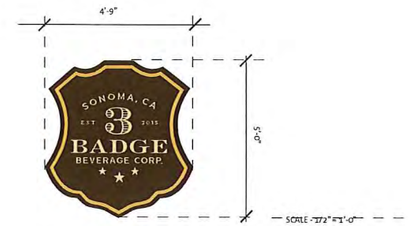

C

SIGN #3

Sign area - 20 SF

Font height OF "3"- 11"

Lettering - Painted metal letters

"Badge" profile - dark patina steel plate

PAINT COLOR

BENJAMIN MOORE
METALLIC GLAZE - LIQUID SILVER PT-100

There is a total of three business signs proposed, two on the Patten Street frontage and one on the Broadway frontage. Patten street is the primary frontage for the property which exceeds 200 ft in length (+/- 250 ft) which allows two business signs (18.16.001 C)

LIGHT FIXTURE #1
MAXLITE
MLVPW14LED50CP

LIGHT FIXTURE #2
MAXLITE
MLVPC14LED50CP

LIGHT FIXTURE #3
RAB LIGHTING
GN1LED26YACS

LIGHT FIXTURE #4
REFURBISHED ANTIQUE FIRE STATION WARNING LIGHT

SIGNAGE AND LIGHTING

MAY 18 2015

MAY 18 2015

7/8" CORRUGATED

CONDENSED TECHNICAL REFERENCE

ROOF PANEL

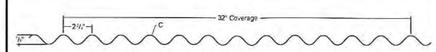

COMMERCIAL INDUSTRIAL PANEL | EXPOSED FASTENED | 32" COVERAGE | MINIMUM SLOPE 1:12 | OPEN FRAMING OR SOLID SUBSTRATE

PANEL OVERVIEW

- Finishes: Standard:MS Colorfast45®, PVDF (Kynar 500®), Bare Galvanized and Acrylic Coated Galvalume®
- Optional: Weathering Steel
- Corrosion Protection: AZ55 per ASTM A 792 for unpainted Galvalume®
  AZ50 per ASTM A 792 for painted Galvalume®
  G90 per ASTM A 653 for Galvanized
- Gauges: 26 ga and 24 ga standard; 22 ga and 20 ga optional
- 32" panel coverage; alternate coverages are avialable, ⅞" rib height
- Panel Length: Minimum: 3'; Maximum: 45' recommended
- Applies over open framing or solid substrate
- Minimum roof slope: 1:12

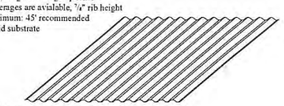

TESTING AND APPROVALS

- UL 2218 Impact Resistance - Class 4
- UL 790 Fire Resistance Rating - Class A, per building code
- UL 263 Fire Resistance Rating - per assembly
- ASTM E 1680 Air Leakage - 0.007 cfm/ft² at 6.24 psf
- ASTM E 1646 Water Penetration - none at 12 psf
- ASTM E 283 Air Leakage - 0.004 cfm/ft² at 6.24 psf
- ASTM E 331 Water Penetration - none at 12 psf
- ASTM E 1592 Structural Performance
- UL 580 Uplift Resistance - Class 90 Construction: #649
- Texas Wind Storm - Evaluation RC-409
- 2010 FBC Approval - FL10999.1
- ICC Evaluation Report - ESR-2385

metal sales manufacturing corporation

7/8" CORRUGATED METAL ROOF BY METAL SALES

W50 - WEATHERED COPPER

EXISTING EXTERIOR STUCCO PAINTED:

BENJAMIN MOORE

HC-27 MONTEREY WHITE

MAY 18 2015

EXTERIOR MATERIAL BOARD

MAY 18 2015

June 16, 2015
Agenda Item #8

M E M O

To: Design Review and Historic Preservation Commission

From: Dan Takasugi, Public Works Director

Subject: Historical Dual Street Name Sign Design

Recent regulations through the Federal Highway Administration (FHWA) have mandated that all street signage meet certain retro-reflectivity standards. This was established through the Manual of Uniform Traffic Control Devices (MUTCD) Section 2A.08. Because retro-reflective properties of signage deteriorate over time, street and traffic signage must be evaluated and replaced when deemed necessary. This would include Street Name signs, although street name signs are at a lower priority than regulatory traffic signage. Current street name signs do not meet that retro-reflectivity standard for headlight visibility.

This FHWA regulation was viewed as an opportunity to consider a new design for the City's street name signs that would distinguish the City of Sonoma and create a "sense of place". One of the Council's 2014/15 Infrastructure Goals was to "Initiate Street signage replacement program to meet retro-reflectivity standards for headlight visibility". The specific action to that objective was to "Consider unique Sonoma historic design street signage". Council budgeted $25,000 to start this program in FY2014/15.

Staff engaged local sign designer, Bob Sanders, of Robert Sanders & Co. to prepare some street name sign study and concept design options. Those options are shown in the attached study document. One of the options, 1-B, is designed to complement the design of the new Plaza directional sign. The sign options present variations in sign shape, font, and color. When the concept design options were presented to the City Council on 3/16/15, a majority preferred Option 1-B (golden Bear and Stars).

On 4/21/15, the design options were presented to the DRHPC for review. The DRHPC also favored Option 1-B, but further suggested that some of the downtown street name signs include their historical dual names on the same street name signs.

Staff took the street name sign issue to City Council on 5/18/15 for approval, recommending design option 1-B, with the suggestion from DRHPC that the historical dual street names be included. Council approved the Option 1-B design option, and directed staff to include the historic street name signs at the 5 intersections around the Plaza. Robert Demler addressed Council suggesting that a date be placed on the signs to make it clear that the historical dual street names were just that, historical. Mr. Demler also informed the Council that the historical dual street names were not meant to be viewed from vehicles, but could only be observed by pedestrians.

Robert Demler subsequently provided a revised historical street name list (attached). The historical street names would also have a "*c. 1835*" indicator. Staff is relying on Robert Demler's research to confirm that 1835 is the proper date to be used. Initially, Robert Demer

desired that the “c. 1835” text be placed on a separate line. But after discussions with staff, Mr. Demler agreed that the date could be placed on the same line as the historical street name, due to the lack of vertical space on a street name sign.

Staff then re-engaged Bob Sanders to provide design options for the historical street name signs. That report of Historical Street Name Concept Designs is attached.

Staff projects that this would be a 2-4 year phased program to replace all Street Name signs within City limits. The first phase would start with the City’s main arterial and collector street name signs.

<u>Attachments</u>: Historical Street Name Concept Designs
Historical Street Names per Robert Demler

cc: Mary Martinez, via will call at City Hall
George McKale, via email
Patricia Cullinan, via email
Alice Duffee, via email

Dual Historical Street Names

for the Sonoma Plaza's five intersections

Reference: *The Sonoma Mission* by Robert S. Smilie [1975]

W Spain St *Calle Vallejo c. 1835*
E Spain St *Calle Vallejo c. 1835*
W Napa St *Calle Napa c. 1835*
E Napa St *Calle Napa c. 1835*
1st St W *Calle Huerta c. 1835*
1st St E *Calle Cuartel c. 1835*
Broadway *La Calle Grande c. 1835*

City Of Sonoma

Dan Takasugi, P.E.
Public Works Director / City Engineer
City of Sonoma
No. 1 the Plaza

Historical Dual Street Name Sign Design

W Spain St
Calle Vallejo c. 1835

E Spain St
Calle Vallejo c. 1835

W Napa St
Calle Napa c. 1835

E Napa St
Calle Napa c. 1835

1st St W
Calle Huerta c. 1835

1st St E
Calle Cuartel c. 1835

Broadway
La Calle Grande c. 1835

Historical Dual Name Sign Specifications

- **SIZE- 10" h x 42"w**
- **FONT- CAPS/ SANS SERIF approx. 1" high/open letter spacing HISTORICAL BLOCK STYLE TO COMPLIMENT SERIF CLARENDON**
- **TYPE WHITE ON GOLD BACKGROUND**
- **OLD STYLE ROUND BORDER**

robert sanders&co.

environmental graphic design

signage design/ consulting

specifications and fabrication

19615 Eighth St.,East
Sonoma, Ca
Mailing Address:
P.O.Box 1356
Sonoma, CA 95476

707 996-3532
fax: 996-2937
www.robertsanders.com
rinfo@robertsanders.com
CA Electrical Sign Contractors License #903370

Approved Design

Historical arch concept/Upper/lower type in Clarendon serif font, color, Clarendon serif font, wording

Top sign 8"h x 42"

TYPICAL SIGN DESIGNS with Dual Historical Name

Bold Condensed

Medium Condensed

Medium Book