City of Sonoma
Design Review and Historic Preservation Commission
AGENDA

Meeting of July 21, 2015 - 6:30 P.M.
Community Meeting Room, 177 First Street West
Sonoma, CA 95476

Meeting Length: **No new items will be heard by the Design Review and Historic Preservation Commission after 10:30 PM**, unless the Commission, by majority vote, specifically decides to continue reviewing items. If an item is not heard due to the length of the meeting, the Commission will attempt to schedule a special meeting for the following week. If a special meeting is necessary, potential dates will be established at the close of this meeting, and a date set as soon as possible thereafter.

CALL TO ORDER – Kelso Barnett, Chair

Commissioners: Tom Anderson
Christopher Johnson
Micaelia Randolph
Leslie Tippell

COMMENTS FROM THE PUBLIC
Presentations by audience members on items not appearing on the agenda.

APPROVAL OF MINUTES
Minutes from the meetings of August 19, 2014 and November 18, 2014

CORRESPONDENCE

ITEM #1 – Sign Review **REQUEST:** Consideration of a new awning and signage for a commercial building (Sweet Scoops). **Applicant:** Sonoma Signs/Sweet Scoops Staff: Wendy Atkins	**Project Location:** 408 First Street East **General Plan Designation:** Commercial (C) **Zoning:** **Planning Area:** Downtown District **Base:** Commercial (C) **Overlay:** Historic (/H)	**RECOMMENDED ACTION:** Commission discretion. **CEQA Status:** Categorically Exempt
ITEM #2 – Sign Review **REQUEST:** Consideration of design review of exterior modifications for two vacation rental units. **Applicant:** Tom Anderson Staff: Wendy Atkins	**Project Location:** 162-166 West Spain Street **General Plan Designation:** Medium Density Residential (MR) **Zoning:** **Planning Area:** Downtown District **Base:** Medium Density Residential (R-M) **Overlay:** Historic (/H)	**RECOMMENDED ACTION:** Commission discretion. **CEQA Status:** Categorically Exempt

ITEM #3 – Discussion Item	RECOMMENDED ACTION:
ISSUE: Discussion and review of sign regulations related to portable freestanding signs. **Staff:** Wendy Atkins	Discuss and provide direction.

ISSUES UPDATE

COMMENTS FROM THE COMMISSION

COMMENTS FROM THE AUDIENCE

ADJOURNMENT

I do hereby certify that a copy of the foregoing agenda was posted on the City Hall bulletin board on July 17, 2015, 2015.

CRISTINA MORRIS, ADMINISTRATIVE ASSISTANT

Rights of Appeal: **Any decision of the Design Review and Historic Preservation Commission may be appealed to the City Council.** Appeals must be filed with the City Clerk within fifteen (15) calendar days following the Design Review and Historic Preservation Commission's decision, unless the fifteenth day falls on a weekend or a holiday, in which case the appeal period ends at the close of the next working day at City Hall. Appeals must be made in writing and must clearly state the reason for the appeal. Appeals will be set for hearing before the City Council on the earliest available agenda.

Copies of all staff reports and documents subject to disclosure that relate to any item of business referred to on the agenda are available for public inspection the Monday before each regularly scheduled meeting at City Hall, located at No. 1 The Plaza, Sonoma CA, (707) 938-3681. Any documents subject to disclosure that are provided to all, or a majority of all, of the members of the Design Review and Historic Preservation Commission regarding any item on this agenda after the agenda has been distributed will be made available for inspection at the Administrative Assistant office, No. 1 The Plaza, Sonoma CA during regular business hours.

If you challenge the action of the Design Review and Historic Preservation Commission in court, you may be limited to raising only those issues you or someone else raised at the public hearing described on the agenda, or in written correspondence delivered to the Administrative Assistant, at or prior to the public hearing.

In accordance with the Americans With Disabilities Act, if you need special assistance to participate in this meeting, please contact the City Clerk (707) 933-2216. Notification 48 hours before the meeting will enable the City to make reasonable arrangements to ensure accessibility to this meeting.

CITY OF SONOMA
DESIGN REVIEW AND HISTORIC PRESERVATION COMMISSION
REGULAR MEETING
August 19, 2014

Community Meeting Room, 177 First Street West, Sonoma, CA

Draft MINUTES

Chair Barnett called the meeting to order at 6:30 p.m.

Roll Call:

Present:	Chair Barnett , Comms. Randolph, Tippell, Johnson (Alternate)
Absent:	Comms. Anderson, McDonald
Others Present:	Planning Director Goodison, Associate Planner Atkins, Administrative Assistant Morris

Chair Barnett stated that no new items would be heard after 10:30 p.m. unless the Design Review and Historic Preservation Commission so decides. Any decisions made tonight can be appealed within 15 days to the City Council. He reminded everyone to turn off cell phones and pagers.

COMMENTS FROM THE PUBLIC: None

APPROVAL OF MINUTES: Comm. Tippell made a motion to approve the Minutes of June 17, 2014. Comm. Johnson seconded. The motion unanimously carried.

CHANGES TO AGENDA ORDER: None

CORRESPONDENCE: None

Item #1 – Consideration of external building modifications and modifications to an approved sign program for a commercial business (Pet Food Express) at 500 West Napa Street, Suites 502-510.

Applicant: Michael Palmer and Pet Food Express (Carol Davis)

Associate Planner Atkins presented staff's report.

Susanne Houston, Sonoma Valley Center Property Manager, proposed a roll up door to replace the existing pedestrian door for a cleaner look.

Carol Davis, Pet Food Express representative, responded to questions about a proposed bulletin board that will be maintained by the store manager. She noted that the company supported animal causes including the Humane Society.

Chair Barnett confirmed with the applicant that a minimum donation fee of $250.00 is required for window posters that feature local pets. The displays are rotated every six months.

Chair Barnett opened the item to public comment.

No public comment.

Chair Barnett closed the item to public comment.

Comm. Tippell is satisfied with the sign but recommended that the applicant take into consideration a smaller size.

Comms. Randolph and Johnson agreed and were pleased the signs featured local animal shelters.

All the Commissioners supported the roll up door for the store.

Comm. Tippell made a motion to approve the application as submitted. Comm. Randolph. seconded. The motion carried unanimously.

Item #2 –Design Review of a proposed addition to a residence at 649 Second Street East

Applicant: David Martineau

Associate Planner Atkins presented staff's report.

Lauren, project designer, felt the staff report accurately described the proposal. She said the Homeowners are committed to the preservation of the historic features while increasing the square footage.

Chair Barnett opened the item to public comment.

No public comment

Chair Barnett closed the item to public comment.

Comm. Randolph confirmed that the designer will extend the L-shape design footprint.

Chair Barnett inquired with staff about the Historic Resource Evaluation and the potential for the building to be listed on the National Historic Register.

Allison Garcia Kellar, Historical consultant/former intern of Patricia Cullinan, prepared the Historic report, and said that standard #10 will not change the integrity of the Historic home if alterations are made.

Comms. Johnson and Randolph supported the proposal because the siding was removed to showcase the beautiful façade.

Comm. Tippell agreed that the change was positive.

Chair Barnett concurred with his fellow Commissioners.

Comm. Randolph made a motion to approve the application as submitted. Comm. Johnson seconded. The motion carried unanimously.

Item #3 –Discussion Item- Discussion and possible action regarding a request to provide a letter of support for a National Register of Historic Places nomination.

Associate Planner Atkin's presented staff's report.

Chair Barnett opened the item to public comment.

Yvonne Bowers, Women's Club President, appreciated the letter of support from the City to place for placing the Women's Club building on the National Register of Historic Places. She stated that Allison Garcia Kellar worked on the drawings for the Women's Club.

Patricia Cullinan, resident, appreciated the Women's Club members many contributions to the City over the years. The building recently celebrated their 100 year anniversary.

Chair Barnett closed the item to public comment.

Comm. Tippell complimented the Women's Club for being great stewards of the community.
Comm. Randolph appreciated the submittal for the designation.

Chair Barnett thanked the Women's club for beautifying the Plaza and encouraged other Historic building property owners to apply for the National Register of Historic Places.

Chair Barnett made a motion to approve the letter of support for a National Register of Historic Places nomination. Comm. Randolph seconded. The motion was unanimously approved.

Associate Planner Atkins reported the following:

The Sign ordinance will come before the Planning Commission at the September 16, 2014 meeting.

Comments from the Audience:

Patricia Cullinan, resident, recommended a Wayfinding sign for Depot Park that will direct people down First Street East. The Public Works department and CSEC will review the new signage. She requested that the DRHPC discuss Demolition by Neglect since it is an important issue.

Adjournment: Chair Barnett made a motion to adjourn at 7:25 p.m. The motion was carried unanimously. The next regular meeting scheduled is at 6:30 p.m. on Tuesday, September 23, 2014.

I HEREBY CERTIFY that the foregoing minutes were duly and regularly adopted at a regular meeting of the Design Review and Historic Preservation Commission on the day of , 2014.

Approved:

_____

Cristina Morris, Administrative Assistant

CITY OF SONOMA
DESIGN REVIEW AND HISTORIC PRESERVATION COMMISSION
REGULAR MEETING
November 18, 2014

Community Meeting Room, 177 First Street West, Sonoma, CA
Draft MINUTES

Chair Barnett called the meeting to order at 6:30 p.m.

Roll Call:

Present:	Chair Barnett, Comms. Randolph, Tippell, Anderson, McDonald
Absent:	Comm. Johnson
Others Present:	Associate Planner Atkins, Administrative Assistant Morris

Chair Barnett stated that no new items would be heard after 10:30 p.m. unless the Design Review and Historic Preservation Commission so decides. Any decisions made tonight can be appealed within 15 days to the City Council. He reminded everyone to turn off cell phones and pagers.

COMMENTS FROM THE PUBLIC: None

APPROVAL OF MINUTES: None

CHANGES TO AGENDA ORDER: None

CORRESPONDENCE: Late mail was received for Item #2 & #3

Item #1 – Consideration of a new wall sign and a new monument sign for a mixed-use building at 19230 Sonoma Highway postponed at the request of the applicant.

Applicant: Audrey Lee

Item #2 – Consideration of a sign review, new awnings, and new windows for a retail business (Corner 103) at 103 West Napa Street

Applicant: Lloyd Davis

Associate Planner Atkins presented staff's report.

Robert Sanders, Robert Sanders & Company, proposed an upgrade to the awnings, signage, and windows for a cleaner look.

Bennett Martin, Strata Strategic Design Studio, discussed the energy efficient replacement windows that will replicate the existing and that the colors will tie in with the other awnings.

Llyod Davis, business owner, envisioned an understated elegant educational wine tasting experience for his customers. He is excited to operate a business in Sonoma and become integrated in the community. He preferred the cooper color for a clean classic look along First Street West.

Chair Barnett opened the item to public comment.

No public comment.

Chair Barnett closed the item to public comment.

Comm. McDonald confirmed with the applicant that the only awning change is at the corner of First Street West and West Napa Street. He supported a sign variance and agreed with the copper color and did not recommend mixing wood with metal windows.

Comm. Tippell agreed with Comm. McDonald that the color palette is important for this historically significant building. She suggested a “pin stripe” design and medium toned color.

Chair Barnett commended the new owner for selecting a wine tasting business at this location. He acknowledged that the building has not been determined to be of historic significance yet felt the proposal needed cautious review. He questioned the integrity of the window replacements.

Staff said a continuance of the item is required to review the window replacements.

Comm. Tippell recommended the continuance.

Comm. Randolph felt the use accommodated a standalone space as intended.

Comm. Anderson broadly accepted the tenant improvements proposed.

Robert Sanders said the applicant will consider suggestions and is flexible.

Comm. Randolph is pleased with the hue of the copper color and charcoal awnings.

Comm. Anderson appreciated the clean solid look presented especially around the Plaza. He felt there might be an opportunity to “lighten up” the look.

Bennett Martin, Architect, responded to concerns about the internal changes to the building that is prominent at this heavily traveled street corner. The interior will be lit the majority of the time.

Comm. Anderson inquired about the sliding windows and doors.

Bennett Martin responded that the single pane glass sliding windows would be wood instead of glass.

Staff indicated that modifications could be made administratively.

Comm. McDonald made a motion to approve the proposal with the following conditions: 1) The new windows shall feature a wood frame; 2)The new windows shall be engineered to slide versus fold; 3) The final section of the windows shall require review and approval by staff, and shall be determined to be compatible with the existing windows and building; 4) The valance of the awnings shall contain a copper color to match the logo color for the business; and, 5) The text of the awning sign on the valance shall incorporate a charcoal color to match the window trim and front door color. In addition, if possible, a mullion shall be incorporated into the design of the new windows to integrate them with the existing windows. Comm. Anderson seconded. The motion carried unanimously.

Item #3 – Consideration of design review for a new single-family residence at 1028 Fifth Street East.

Applicant/Property Owner: Chris Dluzak

Associate Planner Atkins presented staff's report.

Chair Barnett recommended hearing Item #3 & #4 together.

Staff read the differences between the two proposals. It was noted that there is less FAR than allowed in the Development Code.

Comm. McDonald confirmed that the Planning Commission approved the plan so this Commission has no authority to make any changes.

Chris Dluzak, applicant, said he has been working on this site for over a year and is respectful of the neighbors.

Comm. Anderson confirmed that the sample accent color will be the window frame color.

Comm. Tippell confirmed that the window color will match the body color.

Chair Barnett opened the item to public comment.

Bob Felder, neighbor across the street, questioned condition of approval #16 and suggested that a second story element might be built.

Chair Barnett closed the item to public comment.

Comm. McDonald thanked the public for clarifying some flexibility with condition of approval #16. He supported single level high quality custom homes for the site and appreciated the applicant providing building material samples.

Comm. Tippell liked the colors except for the teal color that she considered "outdated".

Comm. Barnett concurred with Comm. Felder's comments but attractive addition to the neighborhood, Comm. Felder's comments about what is approved is the actual plan for the homes being built.

Comm. Randolph is satisfied with the architectural design and agreed with Comm. Tippell about the teal color.

Comm. Anderson concurred with fellow commissioners and appreciated the visual samples.

Comm. Randolph made a motion to approve the proposal with the exception of the Caribbean teal trim color. In addition, the DRHPC recommended the following alternative trim colors for your consideration: Benjamin Moore eclipse (2132-40), Benjamin Moore white dove (OC-17) and Charcoal. It was also recommended that the window color be changed to a darker charcoal color. Comm. Anderson seconded. The motion carried unanimously.

Item #4 — Consideration of design review for a new single-family residence at 1036 Fifth Street East

Applicant/Property Owner: Chris Dluzak

Associate Planner Atkins presented staff's report.

Comm. McDonald inquired about a utility plan.

Staff recommended that the applicant address the utility services in their landscape plan.

Chair Tippell opened the item to public comment.

No public comment.

Chair Tippell closed the item to public comment.

Comm. Randolph made a motion to approve the proposal with the suggestion that the window color be changed to black, charcoal gray, or dark/ blackish green. Comm. Anderson seconded. The motion carried unanimously.

Item #5- Consideration of building elevations, exterior colors, materials, lighting, and landscaping for a 7-unit Planned 800 West Spain Street

Applicant: Ed Routhier, Caymus Capital

Associate Planner Atkins presented staff's report.

Comm. McDonald inquired about a utility plan.

Staff suggested that the applicant address the new utilities in their landscape plan.

Erin Smith, Axia Architects, discussed the proposal.

Chair Barnett opened the item to public comment.

Doug Hillmerman, Project Architect, made modifications to the project based on the recommendations from the last meeting; roofing materials and garage doors. The two story homes are in cluster buildings with a farmhouse motif. He is pleased with the simple efficient layout and close proximity to downtown.

Bill Rinehart, Landscape Architect/Caryle Mason, coordinated with the owner for the placement of the utilities.

Comm. McDonald confirmed the yards are spacious enough to provide the utilities, such as cable and PGE, and he preferred no utilities in the common areas. He advocated that utilities be in place before the building permits are issued.

Ed Routhier, resident, agreed with Comm. McDonald about aesthetic decisions.

Chair Barnett opened the item to public comment.

No public comment.

Chair Barnett closed the item to public comment.

Comm. McDonald appreciated the thoughtful consideration given for providing a variety of floor plans and neighborhood compatibility. He recommended carriage style doors for lots 1 & 2.

Chair Barnett agreed with the design principles and approved with referencing the name/history of the site.

Comm. Anderson liked the Farmhouse Village concept and the four points of entry to the project. He recommended underground utility boxes.

Comms. Randolph and Tippell agreed with the traditional colors and were satisfied with the configuration of the landscape plan that might encourage the neighbors to meet. The only recommendation he had was to upgrade the carriage doors and change the front door color.

Comm. Anderson made a motion to approve the proposal as presented at the meeting (including the modified garage door with the option to upgrade to a carriage house door, incorporating composition roofing material, and no installation of street lights on the private drive) with the following suggestions for your consideration: 1) Incorporate a variety of different colors on the front doors such as lemon yellow, coral blue, and black;and, 2) Install carriage house garage doors on Lots 1 and 2, if possible. Comm. Randolph seconded. The motion carried unanimously.

Associate Planner Atkins reported the following:

The City Council will consider revisions to the sign ordinance at the meeting on December 15, 2014.

Comments from the Audience:

Adjournment: Chair Barnett made a motion to adjourn at 8:50 p.m. to the next regular meeting scheduled for 6:30 p.m. on Tuesday, December 16, 2014.

I HEREBY CERTIFY that the foregoing minutes were duly and regularly adopted at a regular meeting of the Design Review and Historic Preservation Commission on the day of 2014.

Approved:

_____

Cristina Morris, Administrative Assistant

City of Sonoma
Design Review and Historic Preservation Commission
Agenda Item Summary

DRHPC Agenda Item:	**1**
Meeting Date:	**8/21/15**

Applicant	**Project Location**
Sonoma Signs/Sweet Scoops	408 First Street East

Historical Significance

☒ Listed on National Register of Historic Places, including Sonoma Plaza district (See notes)
☒ Listed on California Register of Historic Resources (See notes)
☒ Listed within Local Historic Resources Survey (Potentially Significant)
☒ Over 50 years old (See notes)

NOTES: The structure, referred to as the Pinelli building lies within the Sonoma Plaza National Register Historic District, and is designated as a National Register Contributing Building. The building was constructed in 1891 and is described as a vernacular one-story building. Architectural details on the front façade include a leaded glass transom over the entrance along with a metal eyebrow cornice and dentils.

Request

Consideration of a new awning and signage for a commercial building.

Summary

Awning: The proposal involves installation of a painted wooden closed soffit awning on an integrated aluminum angle bracket frame above the commercial entrance of the building. The applicant is proposing to paint the awning Benjamin Moore Mountain Peak White (OC-121). In terms of compatibility, the exterior color scheme of the building is primarily a plum colored rock-faced wall. Photographs of the existing conditions are attached. The proposed awning is approximately 1.5 feet tall by 10 feet 2 inches wide. The underside of the awning features a custom water jet cut decorative panel consisting of a thin gauge aluminum panel with artwork water-jet cut out of it.

With regard to Building Code requirements, portions of any awning shall be at least 7 feet above any public walkway (Building Code §3206.4). In addition, awnings may extend over public property not more than 7 feet from the face of a supporting building, but no portion shall extend nearer than 2 feet to the face of the nearest curb line measured horizontally (Building Code §3206.3). The proposal complies with these standards in that the awning would provide 7.5 feet of clearance above the public walkway, and would extend only 3 feet from the face of the building, resulting in 9 feet of clearance from the end of the awning width to the face of the curb. The purpose of the awning is to provide business identification and weather protection at the store entrance.

Awning Signage: Five signs are proposed on the awning: Ice Cream; Homemade; and, Sweet Scoops. Three each Ice Cream signs are proposed (one on the awning face and two on the return side). The matte black aluminum logo letters are 3 inches tall by 2 feet 4 inches long. One Homemade sign is proposed (on the awning face). The matte black aluminum logo letters are 3 inches tall by 2.5 feet long. The Sweet Scoops sign is proposed on the awning face. The matte black aluminum logo letters are 2 feet 9 inches tall by 3.5 feet long.

Wall Sign: The proposed sign is 1 foot 4 inches long by 1 foot 4 inches tall (1.76 square feet) and would be attached to the stone facade of the building with a blind mount. In terms of construction, the sign would be composed of a 3/16" water jet cut aluminum panel with high performance digital print graphics with a matte UV protective laminate. The graphics include black copy on a white background. Illumination is not proposed.

Window Signs: One window sign (larger than 1 square foot in area) is proposed. The window sign is proposed on the window facing First Street East and is 3.5 feet long by 1 foot 4 inches tall. The sign would consist of digital print graphics with matte protective laminate. The graphics include black copy on a white background.

Aggregate Sign Area: Based on the building frontage on First Street East (15 feet), the maximum aggregate sign area allowed for the business is 9 square feet. The five awning signs (11.79 square feet in area) and wall sign (1.7 square feet in

area) would result in an aggregate sign area of 13.49 square feet for the business. The proposal is not consistent with this requirement in that the proposed signs would exceed the maximum allowable aggregate sign area for the property by 4.49 square feet. The applicant is requesting a variance from this standard.

Number of Signs: A maximum of two signs are permitted for any one business (§18.16.010). The proposal is not consistent with this requirement in that there would be seven signs for the business with inclusion of the five awning signs, wall sign, and window sign. The applicant is requesting a variance from this standard.

Basic Findings: In order to approve any application for sign review, the review authority must make all of the following findings:

1. The proposed signage complies with applicable policies and regulations, as set forth in this sign ordinance (except for approved variances), all other city ordinances, and the general plan;

2. On balance, the proposed signage is consistent with the purpose and intent expressed by SMC 18.04.010 and the applicable guidelines for signs set forth by SMC 18.60.010, Appendix A – Design guidelines for signs; and,

3. The proposed signage is harmonious and consistent overall with the location of the site, including adjacent and surrounding development and its environmental features.

Variances: As noted above, the proposal would exceed the maximum aggregate sign area, and possible the number of signs normally allowed for a business. The DRHPC may grant variances from the provisions of the sign ordinance provided that certain findings can be made (see below).

1. Exceptional or extraordinary circumstances or conditions, not resulting from any act of the owner or applicant, apply to the location under consideration and not generally to other businesses or properties in the vicinity.

2. Strict adherence to a regulation may cause unnecessary hardship or prohibit the exercise of creative design, and the application submitted is extraordinary and outstanding in design;

3. The exception is the minimum necessary to serve its intended use;

4. The exception is in conformance with the purpose and intent of this title;

5. The granting of the variance will not be detrimental to the public interest or welfare, or injurious to properties or improvements in the vicinity.

Other permits required: In addition to the requirements of this title, all signs and building improvements shall be in conformance with applicable requirements of the 2013 California Building Code and where required by the 2013 California Building Code, shall obtain a building permit prior to installation. An Encroachment Permit shall be required for all work performed in the public right-of-way. Please contact Lisa Sevilla at (707) 933-2205 for information regarding City Encroachment Permits.

Commission Discussion

Design Review and Historic Preservation Commission Action

❑ Approved ❑ Disapproved ❑ Referred to: _____ ❑ Continued to: _____

Roll Call Vote: _____ Aye _____ Nay _____ Abstain _____ Absent

DRHPC Conditions or Modifications

Attachments

1. *Project narrative*
2. *Picture of existing building*
3. *Proposed façade*
4. *Paint scheme*
5. *Design Details*
6. *Historic Resources Inventory*

cc: Sonoma Signs/Sweet Scoops
254 First Street East
Sonoma, CA 95476

Linda Aguilar, via email

Patricia Cullinan, via email

Alice Duffee, via email

SLHP Historic Survey, via email

Mary Martinez, via will call at City Hall

Sweet Scoops, an ice cream producer and retailer at 408 1st Street East, is requesting approval of a facade design program which consists of an updated paint scheme, decorative awning, wall sign, and window graphics. The proposed facade design has been developed to compliment building features while communicating the style of Sweet Scoops Homemade Ice Cream.

The facade program consists of:

Updated Paint Scheme:
Behr Glass Tile (M400-2) will replace the currently painted pink door and lower panelling, while door and window casings along with decorative building molding will be updated with BM Mountain Peak White (OC-121).

Closed Soffit Awning:
This fixed awning features wood molding details, painted BM Mountain Peak White (OC-121) along with matte black aluminum logo letters stud mounted to the awning face and return sides. The underside of the awning features a custom water jet cut decorative panel.

Wall Sign:
The proposed wall sign consists of an aluminum panel, stud mounted to the building, featuring digital print graphics with matte protective laminate.

Window Graphics:
Digital print graphics with matte protective laminate are proposed for the door and windows. Colors consist of mint, white, gray, and black.

SKEY BAR
LIV USIC
ICE CRE
SONOMA
WINE SHOP

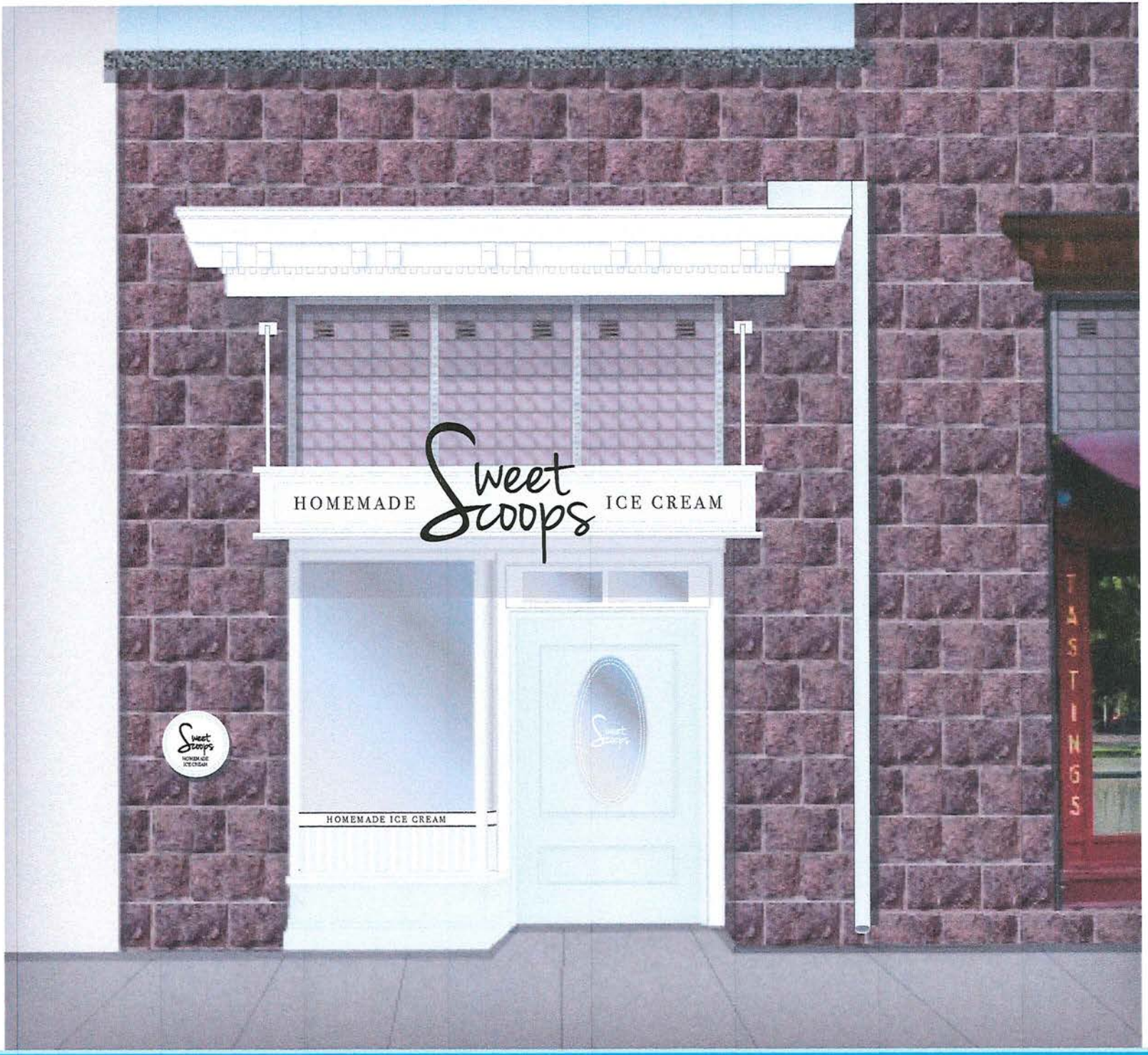

PROPOSED FACADE

JUN 15 2015

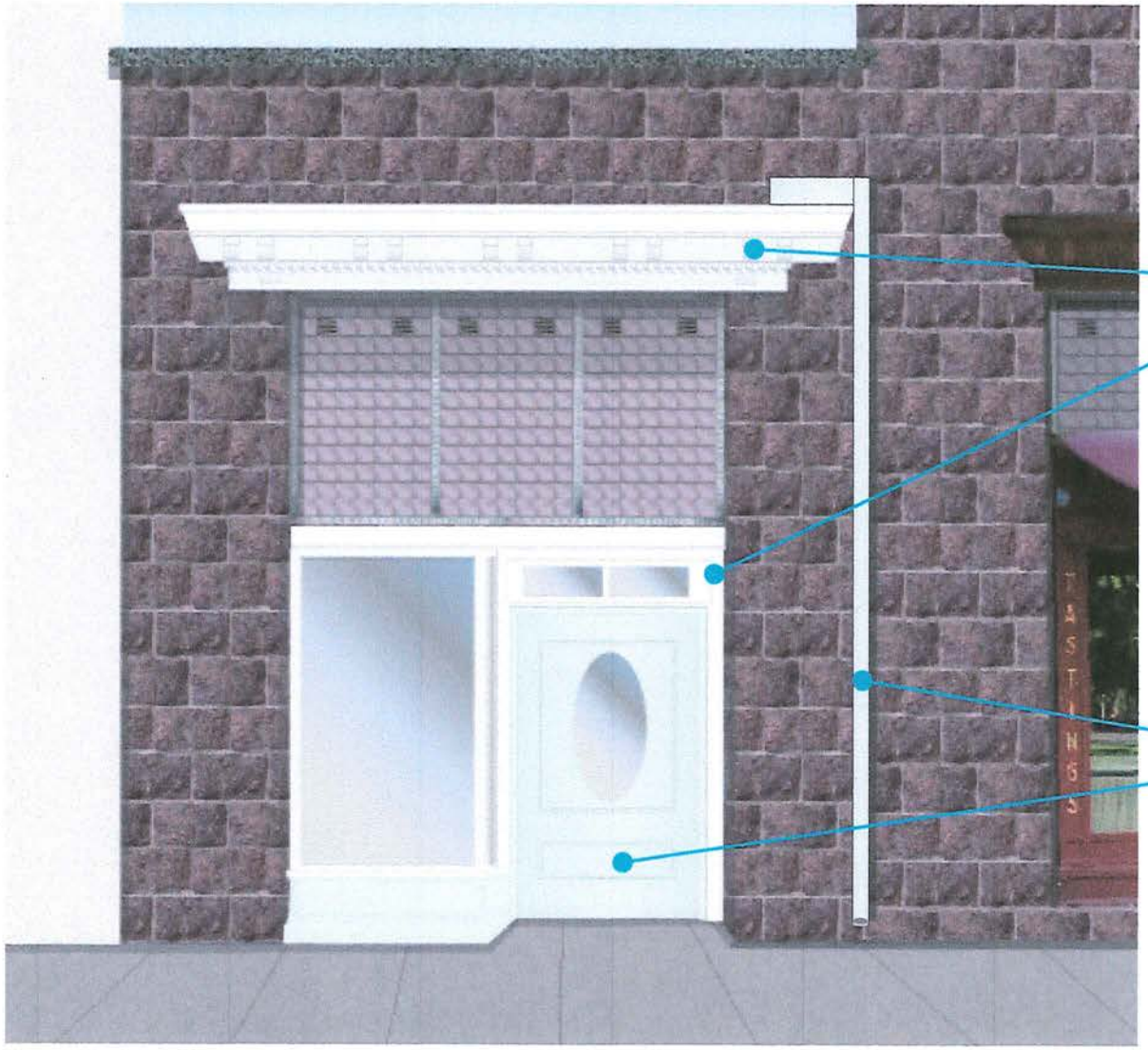

BENJAMIN MOORE
MOUNTAIN PEAK WHITE
OC-121

BEHR
GLASS TILE (M400-2)

SIDE PROFILE

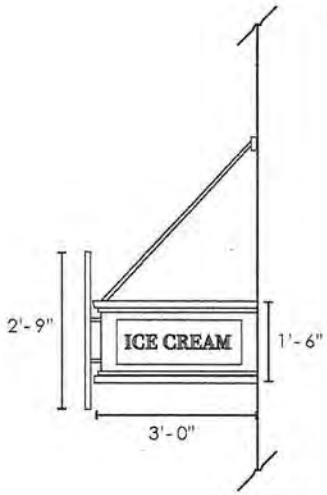

SOFFIT UNDERSIDE FEATURES CUSTOM
SWEET SCOOPS WATER JET CUT ARTWORK

3/16" WATER JET CUT ALUMINUM PANEL
STUDS WELDED TO BACK
BLIND MOUNT INTO STONE FACADE
HIGH PERFORMANCE DIGITAL PRINT GRAPHICS
MATTE UV PROTECTIVE LAMINATE

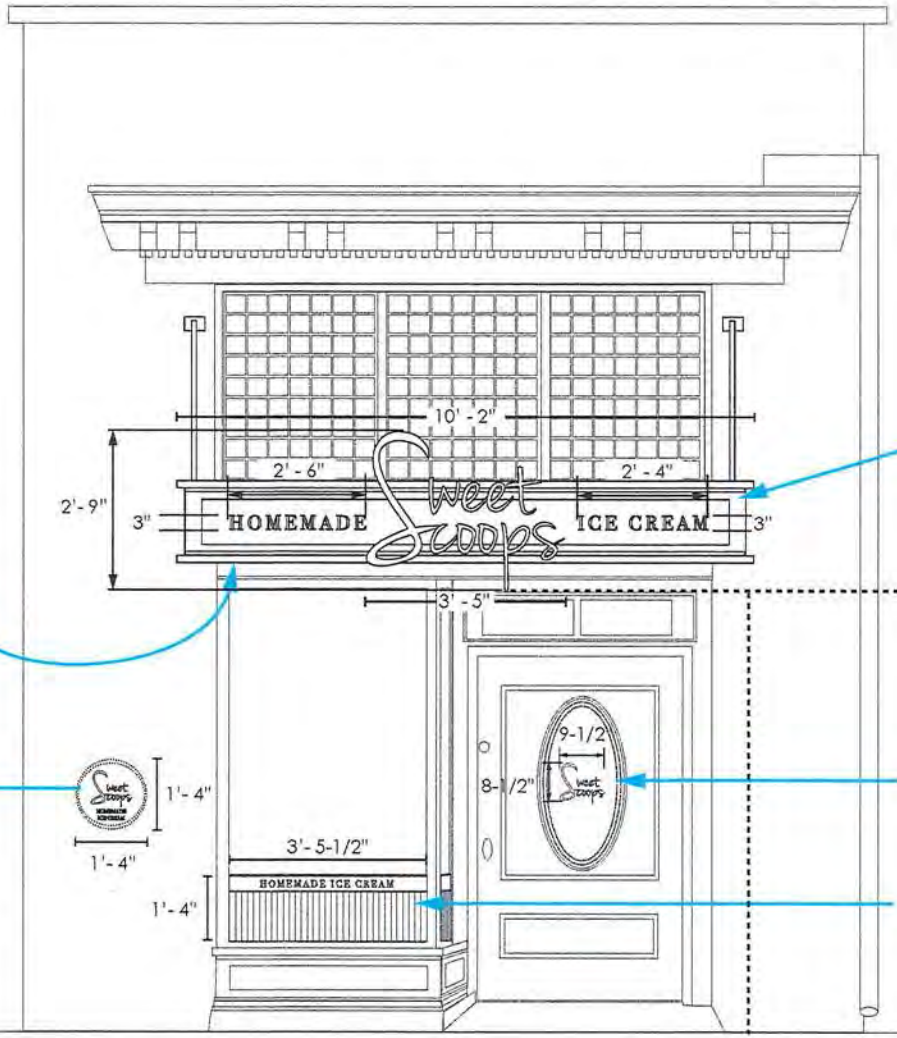

FABRICATED AWNING FEATURING
DECORATIVE WOOD TRIM DETAILS
ALUMINUM DIMENSIONAL LOGO LETTERS
STUD MOUNTED TO AWNING
RETURN SIDES FEATURE ADDITIONAL COPY

HIGH PERFORMANCE CUT VINYL GRAPHICS
3M MATTE WHITE
APPLIED TO EXTERIOR GLASS SURFACE

HIGH PERFORMANCE DIGITAL PRINT GRAPHICS
MATTE UV PROTECTIVE LAMINATE
APPLIED TO EXTERIOR GLASS SURFACE

State of California — The Resources Agency
DEPARTMENT OF PARKS AND RECREATION

HISTORIC RESOURCES INVENTORY

(State use only) Ser ____ Site ____ Mo. ____ Yr. ____
UTM ____ Q ____ NR ____ SHL ____
Lat ____ Lon ____ Era ____ Sig ____
Adm ____ T2 ____ T3 ____ Cat ____ HABS ____ HAER ____ Fed ____

IDENTIFICATION

1. Common name: El Paseo
2. Historic name, if known: Pinelli Building
3. Street or rural address 408, 412, 414 First Street East
   City: Sonoma, Ca. ZIP: 95476 County: Sonoma
4. Present owner, if known: AL GORDON Address: 414 1st Street East
   City: Sonoma ZIP: 95476 Ownership is: Public ☐ Private ☒
5. Present Use: Commercial Shops, Offices upstairs Original Use: Residence upstairs, Bakery in north end, Saloon in South end.
   Other past uses:

DESCRIPTION

6. Briefly describe the present physical appearance of the site or structure and describe any major alterations from its original condition:

This commercial building is situated across from the east side of the Plaza and is of Renaissance Revival Style. It is built of heavy hand-cut basalt stone locally referred to as "Plum Stone" because of its color. The same stone is featured in the sidewalk in front. The roof is flat.

The original structure, built in 1880's & completed in 1890, is a large rectangular two-story building with a small single story addition to the north in 1916. Top of building features a metal cornice with dentils painted to resemble concrete. Double hung windows have stone arches and brick sills. Lower windows on south end have stone voussoirs with keystone. North commercial entrance has leaded glass transom with metal eyebrow cornice and dentils. Entrance to courtyard has stone voussoir with keystone

7. Locational sketch map (draw and label site and surrounding streets, roads, and prominent landmarks):

NORTH

See City Map Area 1C

UTM (SONOMA QUAD)
10/549,300/4,238,740
10/548,280/4,238,400
10/548,210/4,238,070
10/547,230/4,238,180

8. Approximate property size: 71 - E. Spain St.
   Lot size (in feet) Frontage 67 - E. 1st St.
   Depth 247
   or approx. acreage ____.
9. Condition: (check one)
   a. Excellent ☐ b. Good ☒ c. Fair ☐
   d. Deteriorated ☐ e. No longer in existence ☐.
10. Is the feature a. Altered? ☒ b. Unaltered? ☐
11. Surroundings: (Check more than one if necessary)
    a. Open land ☐ b. Scattered buildings ☐
    c. Densely built-up ☐ d. Residential ☐
    e. Commercial ☒ f. Industrial ☐
    g. Other ☐
12. Threats to site:
    a. None known ☒ b. Private development ☐
    c. Zoning ☐ d. Public Works project ☐
    e. Vandalism ☐ f. Other ☐
13. Date(s) of enclosed photograph(s): October 1978

R 523 (Rev. 7/75)

NOTE: The following (Items 14-19) are for structures only.

14. Primary exterior building material: a. Stone [X] b. Brick [ ] c. Stucco [ ] d. Adobe [ ] e. Wood [ ]
f. Other [ ] _____

15. Is the structure: a. On its original site? [X] b. Moved? [ ] c. Unknown? [ ]

16. Year of initial construction 1880 This date is: a. Factual [X] b. Estimated [ ]

17. Architect (if known): _____

18. Builder (if known): August Pinelli

19. Related features: a. Barn [ ] b. Carriage house [ ] c. Outhouse [ ] d. Shed(s) [ ] e. Formal garden(s) [ ]
f. Windmill [ ] g. Watertower/tankhouse [ ] h. Other [ ] _____ i. None [X]

SIGNIFICANCE

20. Briefly state historical and/or architectural importance (include dates, events, and persons associated with the site when known):

This building was built in 1880's by August Pinelli, completed in 1890. The single story addition to the north was built in 1916 from lumber out of school once located behind the Community Center. August Pinelli was a stone worker from Italy. When he arrived in Sonoma he received a contract from General Valle to get stone out of his property. Later he worked with Mr. Schocken who owned Schocken hill. Mr. Pinelli had 8-10 stone workers who worked for him building several of the commercial buildings in Sonoma. The family made wine at the Blue Wing Inn which they owned at the time. In 1911 building was gutted by fire but was re-built. This unusual commercial building built of stone from the local quarries has the typical store front windows of the period. The relationship of its facade is significant to the other commercial buildin on the block.

21. Main theme of the historic resource: (Check only one): a. Architecture [✓] b. Arts & Leisure [ ]
c. Economic/Industrial [2] d. Exploration/Settlement [ ] e. Government [ ] f. Military [ ]
g. Religion [ ] h. Social/Education [ ]

22. Sources: List books, documents, surveys, personal interviews, and their dates:

Interview: August Pinelli, January 1979.

23. Date form prepared: Oct. 1978 By (name): Johanna M. Patri
Address: 621 Napa Road City Sonoma, Ca. ZIP: 95476
Phone: 996-6412 Organization: Sonoma Historic Preservation League

(State Use Only)

Indian Trading Post
PIPS WINE & ACCESSORIES

City of Sonoma
Design Review and Historic Preservation Commission
Agenda Item Summary

DRHPC Agenda Item:	**2**
Meeting Date:	**07/21/15**

Applicant	**Project Location**
Tom Anderson	162-166 West Spain Street

Historical Significance

- ☒ Listed on National Register of Historic Places, including Sonoma Plaza district (Significant)
- ☒ Listed on California Register of Historic Resources (Significant)
- ☒ Listed within Local Historic Resources Survey (Potentially Significant)
- ☒ Over 50 years old (Potentially Significant)

  Year built: circa 1880

Request

Design review of exterior modifications for two vacation rental units located at 162-166 West Spain Street.

Summary

Background: On August 14, 2014, the Planning Commission denied a Use Permit application for adaptive re-use for two vacation rental units. On October 20, 2015 the City Council upheld the appeal and approved a Use Permit allowing, as an adaptive re-use, two vacation rental units within a historic building. The City Council approval also allowed for the following: 1) the in-kind replacement of the rear wooden deck and stairwell; 2) removal of wooden screening lattice beneath the deck; and, 3) the provision of a wheelchair ramp for ADA compliance.

Site Description: The subject property is a 7,500 square foot parcel located on the north side of West Spain Street, mid-block between First Street West and Second Street West. The property is developed with a historic building (the "Weyl House" constructed around 1880) which has been approved to accommodate two vacation rental units. A recent historic resources evaluation prepared by McKale Consulting determined that the Weyl House is eligible for listing on both the Nation Register of Historic Places and California Register of Historical Resources. A three-car garage and parking lot are located behind the structure. The frontage is improved with curb, gutter, and sidewalk. The site is designated Medium Density Residential by the General Plan and has a corresponding R-M zoning.

Proposed Project: The main elements of the project are as follows: 1) add two new small double-hung windows to the east facing elevation (one window on the first floor and one window on the second floor); and, 2) remove the existing canvas front entry canopy in order to expose the existing original classical entablature. Further details can be found in the attached project narrative and accompanying materials. In addition, condition of approval number 1.e. requires that the finial referred to in the League for Historic Preservation description of the building shall be installed. The applicant has indicated that the finial that once existed over the front door appears to be a product of the 1960s and is totally inconsistent with the actual historic style. The DRHPC should discuss and provide the applicant with feedback as to whether the finial should be installed. If it is recommended not to be installed the conditions of approval approved by the City Council will require modification prior to final Building Permit approval by the Planning Department.

Design Review: Alterations to existing structures requiring a Building Permit that result in substantive changes to a primary or street-side building elevation located within the Historic Overlay Zone are subject to architectural review in order to assure that the new construction complies with the following: (1) the required standards, design guidelines, and ordinances of the city; (2) minimize potential adverse effects on surrounding properties and the environment; (3) implement General Plan policies regarding community design; and, (4) promote the general health, safety, welfare, and economy of the residents of the City. (§19.54.080.A).

Factors to be considered: In the coarse of Site Design and Architectural Review, the consideration of the review authority shall include the following factors:

1. The historical significance, if any, of the site or buildings or other features on the site;

A Historic Resources Evaluation Report was completed for the property in May, 2014. This evaluation found that the Weyl House is eligible for listing on the National and California registers, which means that the residence is an "historical resource" under CEQA. In addition, a Finding of Effect was completed for the property in June, 2015. This evaluation found that the Tillem Building Vacation Rental project is in compliance with the Secretary of the Interior's Standards for the Treatment of Historic Buildings, and therefore, would not result in an adverse effect on the historical resource.

2. Environmental features on or adjacent to the site;
   Staff is not aware of any environmental features on or adjacent to the site.

3. The context of uses and architecture established by adjacent development;
   The adjacent properties to the north are developed with residential units and the property to the west is developed with a single family residences. The properties to the south consist of a vacation rental, newly constructed residence, and Bed & Breakfast Inn. The property to the east consists of a driveway, which serves the Park Villas PUD and Cypress Apartments. The proposed project will not alter street views of the building from the street, except with respect to enhancements to its historic integrity (e.g., removal of the existing canvas front entry canopy in order to expose the existing original classical entablature, as recommended by the Historic Evaluation) and the addition of two new small double-hung windows. Setback, coverage, and FAR limitations are all met in the proposal.

4. The location, design, site plan configuration, and effect of the proposed development.
   A Finding of Effect of the building modification was completed for the property in June, 2015. This report determined that the Tillem Building Vacation Rental project is in compliance with the Secretary of the Interior's Standards for the Treatment of Historic Buildings, and therefore, would not result in an adverse effect on the historical resource. As noted above, the addition will not be visible from the street (except with respect to enhancements to its historic integrity and two new windows) and it complies with all applicable requirements of the Development Code.

In general, it is staff's conclusion that the applicant has successfully applied the applicable design guidelines in developing the plan for the replacement structure.

Site Design & Architectural Review: While the proposal complies with the quantitative zoning standards noted above, the project is subject to site plan and architectural review by the DRHPC because the residence was constructed prior to 1945 and lies within the Historic Overlay Zone. In this case, because review by the City Council was necessary, the DRHPC is responsible for reviewing and acting upon the elevation details and exterior materials.

CEQA Compliance: As a discretionary project, the proposal is subject to the requirements of the California Environmental Quality Act (CEQA). As previously noted, a historic resources evaluation report and findings of effect were prepared for the structure and suggested that it is eligible for listing on both the National and California registers. Pursuant to Section 15331 of the CEQA Guidelines, rehabilitation and additions to an historical resource, may be considered categorically exempt from the provisions of CEQA provided the improvements are consistent with the Secretary of the Interior's Standards for the Treatment of Historic Properties (Class 31 – Historical Resource Restoration/Rehabilitation). Accordingly, an analysis was conducted to determine whether the proposal is consistent with the Standards (refer to attached Finding of Effect Tillem Building Vacation Rental Project). The analysis that the proposed project meets the Secretary of the Interior's Standards, which means that application is considered to be categorically exempt from CEQA.

Required Findings: As set forth in §19.54.080.H of the Development Code, in order to approve an application for design review in the Historic Overlay Zone, the Design Review and Historic Preservation Commission must make the following findings:

1. The project complies with applicable policies and regulations, as set forth in this Development Code (except for approved Variances and Exceptions), other City ordinances, and the General Plan.
   The project complies with the applicable policies and regulations set forth in the Development Code.
2. On balance, the project is consistent with the intent of applicable design guidelines set forth in this Development Code.
   The project is consistent with the applicable design guidelines of the Development Code in that the existing structure will be rehabilitated to reinforce the authentic historic character of the Downtown District. The project responds appropriately to the context of adjacent development, as well as existing site conditions and environmental features. The project proposes two vacation rentals, which is consistent with the adjacent

development, and complies with height and setback requirement.

3. The project will not impair the historic character of its surroundings.
   The front and side elevations of the original structure will not be altered, except for minor changes (addition of two windows) and the removal of the existing canvas front entry canopy in order to expose the existing original classical entablature that will improve its historic integrity. This addition will not alter public views of the original residence and it complies with height, setback, coverage and other applicable limitations of the Development Code.
4. The project substantially preserves the qualities of any significant historic structures or other significant historic features on the site.
   A historic evaluation was conducted for the property, which has been developed with a structure that has been determined to be eligible for listing on the National and State registers.
   The project substantially complies with the applicable guidelines set forth in Chapter 19.42 SMC (Historic Preservation and Infill in the Historic Zone).
   In staff's view, the project complies with SMC 19.42 in that the existing structure will be rehabilitated to improve the historic integrity to the house.
5. The project substantially complies with any applicable preservation plan or other guidelines or requirements pertaining to a local historic district as designated through SMC 19.42.020.
   The project is not located on a local historic district.

In summary, it is staff's view that the modified project is consistent with the findings required for approval of the application for Site Design and Architectural Review.

Other permits required: In addition to the requirements of this title, the proposal shall be in conformance with applicable requirements of the 2013 California Building Code and where required by the 2013 California Building Code, shall obtain a building permit prior to installation.

Commission Discussion

Design and Historic Preservation Review Commission Action

❑ Approved ❑ Disapproved ❑ Referred to: _____ ❑ Continued to: _____

Roll Call Vote: _____ Aye _____ Nay _____ Abstain _____ Absent

DRHPC Conditions or Modifications

Attachments:

1. Project Narrative.
2. City of Sonoma Resolution No. 55-2014.
3. Finding of Effect.
4. Historic Resources Evaluation Report.
5. Historic Resources Inventory.
6. Site Plan.
7. Existing and Proposed Exterior Elevations.
8. Proposed South Elevation

cc: Tom Anderson
P.O. Box 1872
Sonoma, CA 95476

Len Tillem/Laura Olson
846 Broadway
Sonoma, CA 95476

Patricia Cullinan, via email

Alice Duffee, via email

SLHP Historic Survey, via email

Mary Martinez, via will call at City Hall

RECEIVED

JUN 23 2015

CITY OF SONOMA

THE WEYL HOUSE

162-166 WEST SPAIN STREET
SONOMA, CA 95476

CONVERT EXISTING OFFICE USE TO VACATION RENTAL

EXECUTIVE SUMMARY

The overall project, previously approved by the City Council, consists of converting existing office space in a two story structure (approximately 1300 square feet per floor) into two vacation rentals.

The present application seeks approval to add two new small double-hung windows (proportional, and similar in style, to the existing adjacent windows) to the East Exterior Elevation; one window for the first floor bathroom and one window for the second floor bathroom).

Additionally, the present application proposes to remove the existing canvas front entry canopy in order to expose the existing original classical entablature, consistent with the home's historic style. Significantly, the "bell-shaped hood with finial" that once existed over the front door and that was referenced and photographed by the Sonoma League for Historic Preservation (SLHP) as part of their 1978-79 historical survey appears to be a product of the 1960's and is totally inconsistent with the actual historic style.

CITY OF SONOMA

RESOLUTION NO. 55 - 2014

A RESOLUTION OF THE SONOMA CITY COUNCIL UPHOLDING THE APPEAL OF LEN TILLEM AND LAURA OLSEN, THEREBY APPROVING A USE PERMIT ALLOWING, AS AN ADAPTIVE RE-USE, TWO VACATION RENTAL UNITS WITHIN A HISTORIC BUILDING (162-166 WEST SPAIN STREET), SUBJECT TO CONDITIONS OF APPROVAL

WHEREAS, on May 16, 2014, Leonard Tillem filed a Use Permit application to convert the mixed-use building at 162-166 West Spain Street into two vacation rental units as an adaptive reuse of an historic structure; and,

WHEREAS, this application was initially considered by the Planning Commission in a public hearing held on June 12, 2014, at which time the Planning Commission continued the item with direction to the applicants to provide additional information in support of the application; and,

WHEREAS, the applicants presented supplemental information, including proposed building improvement plans and detailed cost estimates, that was considered by the Planning Commission at its meeting of August 14, 2014, at which time the Commission voted 6-1 to deny the use permit application; and,

WHEREAS, this decision was appealed to the City Council by Leonard Tillem and Laura Olsen, at which time the appellants submitted additional information substantiating the improvements and investment required to adequately restore the building; and,

WHEREAS, the City Council considered the appeal in a duly noticed public hearing held on October 20, 2014; and,

NOW, THEREFORE, BE IT RESOLVED that the City Council of the City of Sonoma finds and declares as follows:

Section 1.

A. The subject property is developed with a structure known as the Weyl House. Constructed circa 1880. Due to its association with Henry Weyl, an important figure in the history of Sonoma and Sonoma County, this building is historically significant and is eligible for listing on the State Register of Historic Places.

B. The proposed adaptive re-use is consistent with the General Plan because of General Plan policies and implementation measures in the Community Development Element and in the Housing Element that allow for the adaptive re-use of historically-significant structures, in which uses that are not normally permitted may be authorized as an incentive for historic preservation.

C. The proposed use is allowed with a conditional Use Permit within the applicable zoning district and complies with all applicable standards and regulations of this Development Code, because, pursuant to Section 19.42.020 of the Development Code (Adaptive Reuse of Historic Structures), limited nonresidential uses, including vacation rentals, are allowed on properties within the Historic Overlay Zone with a use permit, provided that the use is consistent with the intent of preserving existing historic structures and the historic context of the site. Structures eligible for adaptive reuse as a vacation rental are limited to those that are listed or eligible for listing on the State Register of Historic

Places. In addition, off-street parking is in place to support the proposed use, consistent with the requirements of the Development Code.

D. The location, size, design, and operating characteristics of the proposed use are compatible with the existing and future land uses in the vicinity in that the subject property is located in a transitional area, with bed and breakfast, vacation rental, and multi-family residential uses in the immediate vicinity of the site. Furthermore, the nature of the use and the conditions of approval requiring the appropriate management of the vacation rental ensure that it will be quiet and compatible with residential neighbors.

E. The proposed use will not impair the architectural integrity and character of the zoning district in which it is to be located, because the historic building will be preserved and maintained.

F. The proposed use will serve to enhance, perpetuate, preserve, protect and restore those historic districts, neighborhoods, sites, structures, and zoning districts which contribute to the aesthetic and cultural benefit of the City in that Weyl House possesses considerable historic significance and allowing a intensified use of the property through its conversion to two vacation rental units will ensure that the building will be adequately preserved in the long-term as required by the conditions of approval.

G. The proposed use will serve to stabilize and improve the economic value of historic districts, neighborhoods, sites, structures, and zoning districts, in that the conversion of the Weyl House to two vacation rental units will increase its economic value and trigger the investment of approximately $340,000 in restoration and improvements to the building.

H. The proposed use will serve to preserve diverse architectural design reflecting phases of the City's history, and encourage design styles and construction methods and materials that are compatible with the surrounding neighborhood(s), in that the conversion of the Weyl House to a vacation rental use will not entail any external alteration to the building, except for the restoration of a historic finial and the addition of an accessible ramp, to be located at the back of the structure, changes which have been evaluated and which have been found to not impair the historic integrity of the building.

I. The proposed use will serve to promote and encourage continued private ownership and utilization of structures now so owned and used, in that the conversion of the Weyl House to a vacation rental use will increase its economic value and provide greater resources for its on-going maintenance as a historic building.

Section 2

Pursuant to Section of 15303 of the State CEQA Guidelines, the conversion of existing small structures from one use to another where only minor modifications are made in the exterior of the structure is Categorically Exempt from the provisions of CEQA (Class 3 – Conversion of Small Structures). In addition, there is no substantial evidence that there would be a significant adverse environmental impact associated with the project.

Section 3.

The City Council hereby upholds the appeal of the Planning Commission decision to deny the application and approves a Use Permit allowing the adaptive reuse of the subject property, including the conditions of approval set forth in Exhibit "A".

The foregoing Resolution was duly adopted this 3th day of November 2014, by the following roll call vote:

Ayes:	Barbose, Brown, Gallian
Noes:	Cook, Rouse
Absent:	None

Tom Rouse, Mayor

ATTEST:

Gay Johann
Assistant City Manager/City Clerk

Exhibit "A"

City of Sonoma City Council
CONDITIONS OF APPROVAL
Tillem Vacation Rentals Use Permit
162-166 West Spain Street
November 3, 2014

1. The two vacation rental units shall be constructed and operated in conformance with the project narrative, and the approved site and floor plans except as modified by these conditions and the following:

   a. This permit does not constitute an approval for a Special Event Venue as defined under Section 19.92.020 of the Development Code
   b. Outside activities/noise on the property shall cease by 10 p.m. nightly.
   c. The applicant shall provide a 24-hour contact number for the vacation rental owner/manager to residents and owners of other properties within 100 feet of the project site
   d. The rehabilitation and improvements called for in the project narrative shall be implemented.
   e. The finial referred to in the League for Historic Preservation description of the building shall be installed.

   Enforcement Responsibility: *Planning, Building and Public Works*
   Timing: *Ongoing*

2. Consistent with the purpose of Section 19.42.030 of the City of Sonoma Development Code (Adaptive Reuse), the applicant/owner shall implement regular maintenance and enhancement of the historic building in a manner that conforms to the Secretary of the Interior's Standards for the Treatment of Historic Properties.

   Enforcement Responsibility: *Planning Department*
   Timing: *Ongoing*

3. A minimum of four on-site parking spaces shall be provided and maintained for the two vacation rental units on the property.

   Enforcement Responsibility: *Planning, Building, and Public Works*
   Timing: *Ongoing*

4. The applicant/property owner shall obtain and maintain a business license from the City for the vacation rental use, and shall register with the City to pay associated Transient Occupancy Taxes (TOT) for the two vacation rental units.

   Enforcement Responsibility: *Planning Department; Finance Department*
   Timing: *Prior to operating the vacation rentals and ongoing*

5. Fire and life safety requirements administered by the Fire Department and the Building Division shall be implemented. Minimum requirements shall include approved smoke detectors in each lodging room, installation of an approved fire extinguisher in the structure, and the inclusion of an evacuation plan posted in each lodging room.

   Enforcement Responsibility: *Building Department; Fire Department*
   Timing: *Prior to operating the vacation rentals and ongoing*

6. The vacation rental units shall comply with the annual fire and life safety certification procedures of the Fire Department.

Enforcement Responsibility: *Fire Department*
Timing: *Ongoing*

7. Any signage proposed in association with the vacation rentals shall be subject to review and approval by Planning Department staff or the Design Review & Historic Preservation Commission as applicable.

Enforcement Responsibility: *Planning Department; DRHPC*
Timing: *Prior to installation of any signage for the vacation rentals*

8. All Building Department requirements shall be met, including applicable Building Code requirements related to the change in use of the structure, and compliance with ADA requirements (i.e. disabled access, disable parking, accessible path of travel, bathrooms, etc.). A building permit shall be required.

Enforcement Responsibility: *Building Department*
Timing: *Prior to construction; Prior to operating the vacation rentals*

9. All Fire Department requirements shall be met including the provision of fire sprinklers within the structure if deemed necessary.

Enforcement Responsibility: *Fire Department; Building Department*
Timing: *Prior to issuance of any building permit; Prior to operating the vacation rentals*

10. The Applicant shall pay any required increased water fees applicable to the changes in use in accordance with the latest adopted rate schedule.

Enforcement Responsibility: *Public Works Department; Water Operations Supervisor; City Engineer*
Timing: *Prior to finaling any building permit; Prior to operating the vacation rentals*

11. The applicant shall comply with the following requirements of the Sanitation Division of Sonoma County Permit & Resource Management Department (PRMD) and the Sonoma County Water Agency (SCWA) as applicable:

    a. In accordance with Section 5.05, "Alteration of Use", of the Sonoma Valley County Sanitation District Ordinances, the Applicant shall pay any applicable increased sewer use fees for converting use of the structure to two vacation rental units. Any required increased sewer use fees shall be paid the Engineering Division of PRMD prior to the commencement of the use(s).
    b. A sewer clearance shall be provided to the City of Sonoma Building Department verifying that all applicable sewer fees have been paid prior to the issuance of any building permit. **Note: Substantial fees may apply for new sewer connections and/or the use of additional ESDs from an existing sewer connection. The applicant is encouraged to check with the Sonoma County Sanitation Division immediately to determine whether such fees apply.**

Enforcement Responsibility: *Sanitation Division of Sonoma County Planning & Management Resource Department; Sonoma County Water Agency: City of Sonoma Building Department*
Timing: *Prior to issuance of a building permit; Prior to operating the vacation rentals*

12. In addition to those already identified, the following agencies must be contacted by the applicant to determine permit or other regulatory requirements of the agency prior to issuance of a building permit, including the payment of applicable fees.

a. Sonoma Valley Unified School District [For school impact fees]

Enforcement Responsibility:	*Building Department*
Timing:	*Prior to issuance of a building permit*

State of California — The Resources Agency
DEPARTMENT OF PARKS AND RECREATION

HISTORIC RESOURCES INVENTORY

(State use only)
Ser _____ Site _____ Mo. ____ Yr. ____
UTM _____ Q _____ NR 4 SHL ____
Lat _____ Lon _____ Era ____ Sig ____
Adm ____ T2 ____ T3 ____ Cat ____ HABS ____ HAER ____ Fed ____

IDENTIFICATION

1. Common name: Henry Wendegar
2. Historic name, if known: _____
3. Street or rural address 162-4-6 West Spain Street
   City: Sonoma ZIP: 95476 County: Sonoma
4. Present owner, if known: Henry Wendegar Address: 1505 Fifth Avenue
   City: San Francisco, CA ZIP: 94122 Ownership is: Public ☐ Private ☒
5. Present Use: Residence-4 units Original Use: Residence
   Other past uses: _____

DESCRIPTION

6. Briefly describe the present physical appearance of the site or structure and describe any major alterations from its original condition:

Is a two-story wooden gable roof, wooden frame house with wood siding. Has a broken pediment with decorative bargeboard. The door is covered by a bell shaped hood with finial. Three apartments. Ornamental wood siding. Has a rectangular window with detail under the gable roof. Three tall decorated 2 sash windows on the 2nd floor. Two tall windows on the side of the house. There is a diamond lighting window on the side. There is an attached smaller portion in the back of the house.

7. Locational sketch map (draw and label site and surrounding streets, roads, and prominent landmarks):

NORTH

See City Map - Area 9.

UTM (SONOMA QUAD)
10/546,020/4,239,320
10/548,540/4,239,050
10/548,420/4,238,220
10/545,950/4,238,530

8. Approximate property size:
   Lot size (in feet) Frontage 50 ';
   Depth 150 ';
   or approx. acreage _____.
9. Condition: (check one)
   a. Excellent ☐ b. Good ☒ c. Fair ☐
   d. Deteriorated ☐ e. No longer in existence ☐
10. Is the feature a. Altered? ☒ b. Unaltered? ☐
11. Surroundings: (Check more than one if necessary)
    a. Open land ☐ b. Scattered buildings ☐
    c. Densely built-up ☐ d. Residential ☒
    e. Commercial ☐ f. Industrial ☐
    g. Other ☐ _____
12. Threats to site:
    a. None known ☐ b. Private development ☐
    c. Zoning ☐ d. Public Works project ☐
    e. Vandalism ☐ f. Other ☐ _____
13. Date(s) of enclosed photograph(s): January 1978

523 (Rev. 7/75)

NOTE: The following (Items 14-19) are for structures only.

14. Primary exterior building material: a. Stone ☐ b. Brick ☐ c. Stucco ☐ d. Adobe ☐ e. Wood ☒
    f. Other ☐ _____

15. Is the structure: a. On its original site? ☒ b. Moved? ☐ c. Unknown? ☐

16. Year of initial construction 1890 This date is: a. Factual ☐ b. Estimated ☒

17. Architect (if known): _____

18. Builder (if known): _____

19. Related features: a. Barn ☐ b. Carriage house ☐ c. Outhouse ☐ d. Shed(s) ☐ e. Formal garden(s) ☐
    f. Windmill ☐ g. Watertower/tankhouse ☐ h. Other ☐ _____ i. None ☐

SIGNIFICANCE

20. Briefly state historical and/or architectural importance (include dates, events, and persons associated with the site when known):

This is one of the larger buildings close to the Old Sonoma Hotel. It is of great support to the surrounding buildings and part of a cluster that maintains balance and historical background.

Mr. Weyl was born in the house nearby in the late 1910. There is no specific information now but this house is one of the major buildings in the 1st Street West and Spain Street corner of the Plaza.

21. Main theme of the historic resource: (Check only one): a. Architecture ☐ b. Arts & Leisure ☐
    c. Economic/Industrial ☐ d. Exploration/Settlement ☒ e. Government ☐ f. Military ☐
    g. Religion ☐ h. Social/Education ☐

22. Sources: List books, documents, surveys, personal interviews, and their dates:

Interview with Reibli, Kiser and Weyl.

23. Date form prepared: 1979 By (name): C. De Petris
    Address: 384 Chase Street City Sonoma ZIP: 95476
    Phone: 938-5348 Organization: Sonoma League for Historic Preservation

(State Use Only)

DPR

MCKALE CONSULTING
717 Lasuen St
Sonoma, CA 95476

June 23, 2015

FINDING OF EFFECT

Tillem Building Vacation Rental Project

Introduction

The purpose of this Finding of Effect Report (FOE) is to determine if implementation of the current application for the Tillem Building Vacation Rental project would result in a "substantial adverse change" to the Weyl House.

The building was formally evaluated (McKale 2014) to determine if it was eligible for listing on the National Register of Historic Places and California Register of Historical Resources. The evaluation found the Weyl House to be eligible for listing on both the National and California registers as it is "associated with the lives of persons significant in our past." (Criterion 2/B). The house was constructed by Henry Weyl, a significant figure in the history of Sonoma, and has retained enough integrity to convey its significance.

The project area is located at 162, 164 and 166 West Spain Street (APN 018-780-006-000), Sonoma, Sonoma County, California, herein referred to as the Weyl House. The building was constructed by Henry Weyl around 1880. The building is just outside of the Sonoma Historic Plaza District, however, is located within Sonoma's Historic overlay.

Project Description

The overall project, previously approved by the City Council, consists of converting existing office space in a two story structure (approximately 1300 square feet per floor) into two vacation rentals.

The present application seeks approval to add two new small double-hung windows (proportional, and similar in style, to the existing adjacent windows) to the East Exterior Elevation; one window for the first floor bathroom and one window for the second floor bathroom).

Additionally, the present application proposes to remove the existing canvas front entry canopy in order to expose the existing original classical entablature, consistent with the home's historic style. Significantly, the "bell-shaped hood with finial" that once existed over the front door, referenced and photographed by the Sonoma League for Historic Preservation (SLHP) as part of their 1978-79 historical survey, is inconsistent with the home's historic architecture.

Substantial Adverse Change Criteria

Substantial adverse change includes demolition, destruction, relocation, or alteration such that the significance of an historical resource would be impaired (PRC § 5020.1(q)).

JUN 23 2015

While demolition and destruction are fairly obvious significant impacts, it is more difficult to assess when change, alteration, or relocation crosses the threshold of substantial adverse change. The CEQA Guidelines provide that a project that demolishes or alters those physical characteristics of an historical resource that convey its historical significance (character defining features) can be considered to materially impair the resource's significance (Weeks and Grimmer 1995).

Discussion

The McKale (2014) evaluation concluded that the Weyl House is eligible for listing in the National and California registers under criterion B. Henry Weyl was a significant and important individual in Sonoma's history. There is a direct link between Henry Weyl and the house at 162, 164 and 166 West Spain Street. Today, the Weyl House is one of only three buildings that have survived from Weyl's ownership and development of Lot 27. These buildings are historically tied to Weyl and his significant contributions to the City of Sonoma.

There have been changes to the Weyl House over time. These include the replacement of sash windows with modern sash windows and the removal of elements such as the "bell-shaped hood with finial" covering the door as described by the League in their 1978 historical survey.

Specifically, the exterior character defining features include its general shape and form. The Weyl House is a two-story wood frame house with a rectangular shape. Today, the building retains the general shape and form from its initial construction as indicated by the 1891, 1897 and 1905 Sanborn Insurance maps. Additional character defining features include a wood gable roof with a closed pediment, simple barge horizontal wood siding and sash windows.

Though the original wood framed sash windows have been replaced with vinyl, their replacement met the Secretary of Interior's Standards for replacing historic windows (Grimmer, Hensley, Petrella and Tepper 2011) which states that "the appearance of the replacement windows must be consistent with the general characteristics of a historic window of the type and period, but need not replicate…in many cases this may be accomplished using substitute materials."

Application of the Criteria of Adverse Effect

The Tillem Building Vacation Rental project proposes changes to the exterior portions of the Weyl House.

The Secretary of Interior's Standards for Rehabilitation (1990) state, "new additions, exterior alterations, or related new construction shall not destroy historic materials that characterize the property. The new work shall be compatible with the massing, size, scale, and architectural features to protect the historic integrity of the property and its environment."

The present application seeks approval to add two new small double-hung windows (proportional, and similar in style, to the existing adjacent windows) to the East Exterior Elevation; one window for the first floor bathroom and one window for the second floor bathroom). The new windows will have the "general characteristics of a historic window of both type and period" and will be compatible, given their function as bathroom windows, with the massing, size, scale and architectural features of the existing windows.

Additionally, the present application proposes to remove the existing canvas front entry canopy in order to expose the existing original classical entablature, consistent with the home's historic style. The "bell-shaped hood with finial" that once existed over the front door, referenced and

JUN 2 2

photographed by the Sonoma League for Historic Preservation (SLHP) as part of their 1978-79 historical survey, is inconsistent with the home's historic architecture. Furthermore, the building was determined eligible for listing on the National and California registers though the "bell-shaped hood with finial" had been removed.

The Tillem Building Vacation Rental project is in compliance with the Secretary of the Interior's Standards for the Treatment of Historic Buildings, and therefore, would not result in an adverse effect on the historical resource.

References Consulted

Advisory Council on Historic Preservation (ACHP)
1990 Treatment of Archaeological Properties: A Handbook available at http://www.achp.gov/archguide.html

Grimmer, E. Anne, Jo Ellen Hensley, Liz Petrella and Audrey T. Tepper
2011 The Secretary of the Interior's Standards for Rehabilitation & Illustrated Guidelines on Sustainability for Rehabilitating Historic Buildings. National Park Service.

McKale, George
2014 Historic Resources Evaluation Report, 162, 164 and 166 West Spain Street (APN 018-780-006-000), The Weyl House, Sonoma, Sonoma County, California. McKale Consulting.

National Park Service
1986 Guidelines for Completing National Register of Historic Places Forms. Bulletin 16. U.S. Department of the Interior, Washington, D.C.
1997a National Register Bulletin: How to Apply the National Register Criteria for Evaluation. U.S. Department of the Interior, Washington, D.C.
1997b National Register Bulletin: How to Complete the National Register Registration Form. U.S. Department of the Interior, Washington, D.C.
1999 Guidelines for Evaluating and Documenting Rural Historic Landscapes. National Park Service, Washington, D.C.
2000 Guidelines for Evaluating and Registering Archeological Properties. National Park Service, Washington, D.C.
2007 Secretary of the Interior's Standards for Preservation Planning. U.S. Department of the Interior, Washington, D.C. Accessed at http://www.cr.nps.gov/local-law/arch_stnds_1.htm, on January 1, 2007.

National Park Service Technical Preservation Services Publications
No. 32: Making Historic Properties Accessible.
No. 9: The Repair of Historic Wooden Windows.
No. 10: Exterior Paint Problems on Historic Woodwork.
No. 11: Rehabilitating Historic Storefronts.
No. 12: The Preservation of Historic Pigmented Structural Glass (Vitrolite and Carrara Glass).
No. 13: The Repair and Thermal Upgrading of Historic Steel Windows.

Weeks, Kay D., and Anne E. Grimmer
1995 The Secretary of the Interior's Standards for the Treatment of Historic Properties with Guidelines for Preserving, Rehabilitating, Restoring & Reconstructing Historic Buildings. National Park Service, Washington, D.C.

JUN 23 2015

HISTORIC RESOURCES EVALUATION REPORT

162, 164 AND 166 WEST SPAIN STREET (APN 018-780-006-000)

THE WEYL HOUSE

SONOMA, SONOMA COUNTY, CALIFORNIA

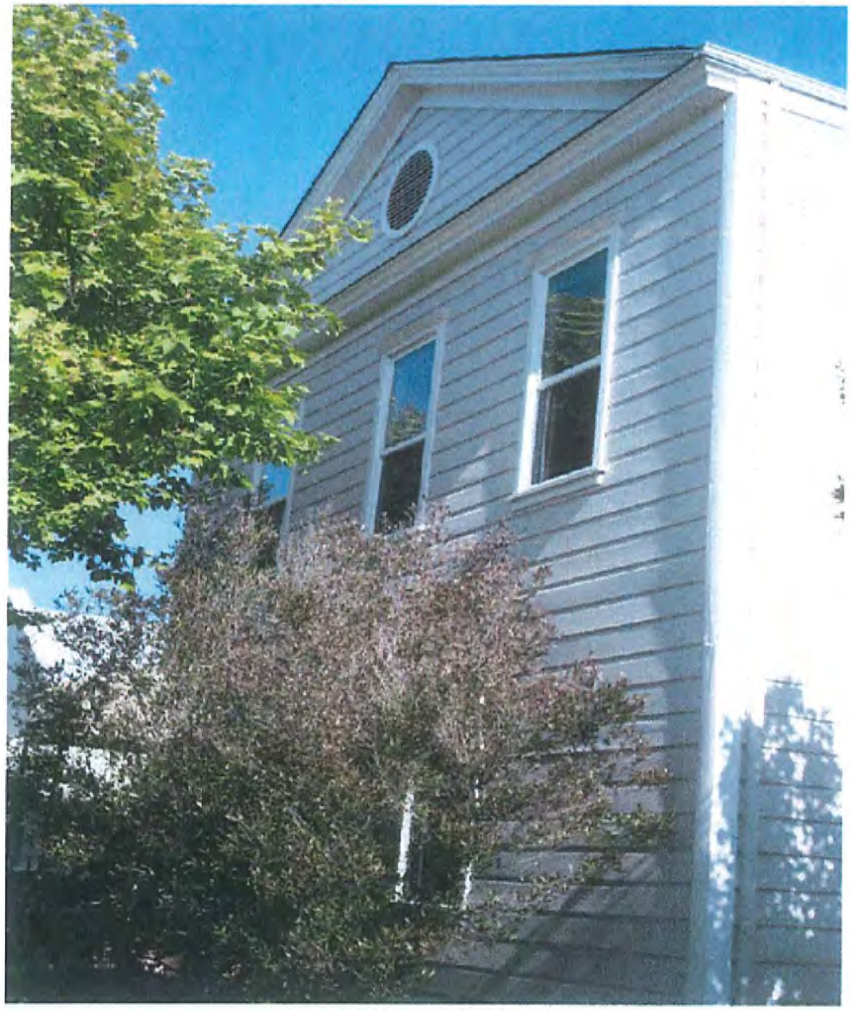

McKale Consulting

May 10, 2014

HISTORIC RESOURCES EVALUATION REPORT

162, 164 AND 166 WEST SPAIN STREET (APN 018-780-006-000)

THE WEYL HOUSE

SONOMA, SONOMA COUNTY, CALIFORNIA

Submitted to:

David Goodison, Planning Director
City of Sonoma Planning Department
No. 1 The Plaza
Sonoma, California 95476

Prepared by:

George McKale, M.A., RPA #11628
McKale consulting
717 Lasuen St.
Sonoma, California 95476
(707) 337-0788

McKale Consulting

May 10, 2014

INTRODUCTION AND SUMMARY OF FINDINGS

The project area is located at 162, 164, and 166 West Spain Street (APN 018-780-006-000), Sonoma, Sonoma County, California (Figure 1; Location Map), herein referred to as the Weyl House. The building was constructed by Henry Weyl around 1880. Currently, the building contains a separate living area on the lower level and offices on the second floor. The building was evaluated to determine if it was eligible for listing on the National Register of Historic Places and California Register of Historical Resources. The building is just outside of the Sonoma Historic Plaza District, however, is located within Sonoma's Historic overlay.

This evaluation found the Weyl House to be eligible for listing on both the National and California registers as it is "associated with the lives of persons significant in our past.) (Criterion 2/B). The house was constructed by Henry Weyl, a significant figure in the history of Sonoma, and has the integrity to convey its significance.

LEGISLATIVE AND REGULATORY CONTEXTS

National Register of Historic Places Criteria

As stated in National Register Bulletin *How to Apply the National Register Criteria for Evaluation:*

Preserving historic properties as important reflections of our American heritage became a national policy through passage of the Antiquities Act of 1906, the Historic Sites Act of 1935, and the National Historic Preservation Act of 1966, as amended. . . The National Historic Preservation Act of 1966 authorized the Secretary to expand this recognition to properties of local and State significance in American history, architecture, archaeology, engineering, and culture, and are worthy of preservation. The National Register of Historic Places is the official list of the recognized properties, and is maintained and expanded by the National Park Service on behalf of the Secretary of the Interior [National Park Service 1997a:i].

An historic property is any district, site, building, structure, or object listed in or eligible for listing in the National Register (36 CFR §800.16(1)(1)). An historic property is eligible for the National Register at the local, state, or national level (National Park Service 1997a:i, 1, 9-10). The criteria for determining a resource's eligibility for National Register listing are defined at 36 CFR §60.4 and are as follows:

. . . the quality of significance in American history, architecture, archaeology, engineering, and culture is present in districts, sites, buildings, structures, and objects that possess integrity of location, design, setting, materials, workmanship, feeling and association, and

A) That are associated with events that have made a significant contribution to the broad patterns of our history; or
B) That are associated with the lives of persons significant in our past; or
C) That embody the distinctive characteristics of a type, period, or method of construction, or that represent the work of a master, or that possess high artistic values, or that represent a significant and distinguishable entity whose components may lack individual distinction; or
D) That have yielded, or may be likely to yield, information important in prehistory or history.

Figure 1: Weyl House, Sonoma 7.5 Topographic Map
162, 164 and 166 West Spain Street

National Register Bulletin *How to Apply the National Register Criteria for Evaluation* states that in order for a property to qualify for listing the National Register, it must meet at least one of the National Register criteria for evaluation by:

- Being associated with an important historic context *and*
- Retaining historic integrity of those features necessary to convey its significance.

According to the National Park Service, "properties that have achieved significance within the past 50 years shall not be considered eligible" unless such properties are "of exceptional importance" (National Park Service 1997a:2).

Historic Integrity

In addition to meeting one or more of the significance criteria, a cultural resource must retain its historic integrity to be considered eligible for listing in the National Register. To possess integrity, a property must be able to convey its significance. National Register Bulletin *How to Apply the National Register Criteria for Evaluation* (National Park Service 1997a:44) states that the quality of significance is present in districts, sites, buildings, structures, and objects that possess integrity. There are seven aspects of integrity to consider when evaluating a cultural resource: location, design, setting, materials, workmanship, feeling, and association.

- *Location* is the place where the historic property was constructed or the place where the historic event occurred. The actual location of a historic property, complemented by its setting, is particularly important in recapturing the sense of historic events and persons.

- *Design* is the combination of elements that create the form, plan, space, structure, and style of a property. Design includes such elements as organization of space, proportion, scale, technology, ornamentation, and materials.

- *Setting* is the physical environment of a historic property. Setting refers to the character of the place in which the property played its historical role. Physical features that constitute the setting of a historic property can be either natural or manmade, including topographic features, vegetation, paths or fences, or relationships between buildings and other features or open space.

- *Materials* are the physical elements that were combined or deposited during a particular period of time and in a particular pattern or configuration to form a historic property.

- *Workmanship* is the physical evidence of the crafts of a particular culture or people during any given period in history or prehistory. It is the evidence of the artisan's labor and skill in constructing or altering a building, structure, object or site.

- *Feeling* is a property's expression of the aesthetic or historic sense of a particular period of time. It results from the presence of physical features that, taken together, convey the property's historic character.

- *Association* is the direct link between an important historic event or person and a historic property.

"To retain historic integrity a property will always possess several, and usually most of the aspects" (National Park Service 1997a:44).

Period of Significance

The period of significance for a property is "the length of time when a property was associated with important events, activities, or persons, or attained the characteristics which qualify it for National Register listing: (National Park Service 1997b:42). The period of significance begins with the date of the earliest important land use or activity that is reflected by historic characteristics tangible today. The period closes with the date when events having historical importance ended (National Park Service 1997b:42). The period of significance for an archeological property is "the time range (which is usually estimated) during which the property was occupied or used and for which the property is likely to yield important information" (National Park Service 2000:34). Archaeological properties may have more than one period of significance.

Secretary of the Interior's Professional Qualifications Standards

This cultural resources study was carried out by, or under the direct supervision of, persons meeting the *Secretary of the Interior's Professional Qualifications Standards* for *Architectural History, History* and *Archaeology* (48 CFR 44716). The Principal Investigator for this project is George McKale. This report was prepared by George McKale. Mr. McKale has an M.A. in Cultural Resources Management from Sonoma State University and 20 years of experience conducting Cultural Resource Management projects in California. He is a Registered Professional Archaeologist No. 11628 (Appendix B: Resume).

Reporting Standards

This cultural resources study has been prepared in accordance with the California Office of Historic Preservation's *Archaeological Resource Management Reports (ARMR): Recommended Contents and Format* (California Office of Historic Preservation 1990) and the *Secretary of the Interior's Standards and Guidelines for Archaeology and Historic Preservation* (48 CFR 44716).

LOCATION AND SETTING

The Weyl House is located about 300 feet west from Sonoma's historic Plaza, at 162, 164 and 166 West Spain Street (APN 018-780-006-000), Sonoma, California. The building is depicted within the southwest portion of the Sonoma 7.5' USGS topographic quadrangle, within the Mexican era land grant *Pueblo de Sonoma*, in un-sectioned land, Township 5 North, Range 6 West, Mt. Diablo Base and Meridian.

The building is located on the floor of Sonoma Valley, east of Sonoma Creek at 90 feet above mean sea level. The Universal Transverse Mercator (UTM) grid coordinates to the approximate center of the project area, as determined by measurement from the USGS 7.5 Sonoma topographical quadrangle (1951, photorevised 1968) are 4238514 meters north; 546386 meters east, Zone 10. The land consists of a level lot whose soils support grasses, forbs, ornamental trees and plants.

METHODS

A records search, background research and field survey were conducted.

Records Search

A records search (13-1646) for this Historic Resource Evaluation Report was conducted on April 25, 2014, at the Northwest Information Center (NWIC), Sonoma State University, Rohnert Park, California. The NWIC is an affiliate of the State of California Office of Historic Preservation, and the official state repository of cultural resource records for a 16-county area, including Sonoma County. Previously recorded cultural resource records and previous studies conducted of, or adjacent to, the project area were reviewed.

McKale Consulting reviewed the following cultural resources inventories published by the California Department of Parks and Recreation (DPR) and the California Office of Historic Preservation (OHP):

- *California Inventory of Historic Resources* (DPR 1976);
- *Five Views: An Ethnic Historic Site Survey for* California (OHP 1988);
- *California Historical Landmarks* (OHP 1996); and
- *California Points of Historical Interest* (OHP 1992).
- *Historic Property Data File* (April 5, 2012)

The Weyl House is listed in the *Historic Property Data File*, and has a National Register Status code of 7N (Need to be reevaluated [formerly NR Status Code 4]).

Field Investigations

A field survey was conducted on April 16, 2014, and consisted of a visual review and assessment of the building in order to assess its current condition.

HISTORICAL CONTEXT

Sonoma's Early History

The project area is located in the former Mission lands about .5 mile west of the Sonoma Mission, established by the Mexican government in 1823. Mission San Francisco de Solano was the northern - most mission in a chain of 21 and was developed at a time when the Mexican government began to lose control of its northern territories. Within 10 years of its founding, secularization of the entire mission system was initiated. Mission San Francisco de Solano was established by Franciscan Padre Jose Altimira. He received strong support from the Mexican government regarding the location of the mission, given it's proximity to the Russian settlement at Ross. During this period, the project area was most likely used for grazing.

Mexican Period (1822-1848)

San Francisco de Solano initially thrived under Mexican authority. By 1830, 650 Native Americans had been baptized. The mission livestock included 2,000 head of cattle, 4,000 sheep and 725 horses. The mission included agricultural pursuits planting grain, orchards and vineyards. Ultimately, Mexican independence from Spain led to the demise of California's mission system.

Secularization began in 1834, when the Mexican government exiled the Franciscan padres. While secularization was intended to return the land to the Native Americans, most Native Americans began to

work on ranchos or fled to more isolated indigenous groups that had survived outside of the mission system. Sonoma's mission lands were parceled and sold to the non-native citizens of Sonoma.

By 1846, Mission lands in California often morphed into rancheros. These rancheros produced hides and relied heavily on Native labor. Between 1846 and 1848, the United States and Mexico went to war. Mexico lost the war and as a result lost almost half of its territory. In anticipation of a war with Mexico, a group of Americans rode into Sonoma on June 14, 1846, proclaiming California a republic of the United States. The incident is known as the Bear Flag Revolt. California achieved statehood in 1850.

American Period

On January 24, 1848, gold was discovered by James Marshall at Sutter's Mill. The gold rush that followed had profound effects on the state of California. Prior to the Gold Rush, San Francisco had a population of about 200. By 1852, San Francisco's population increased to 36,000. California developed its infrastructure as roads, towns and businesses were developed throughout the state.

Prior to 1869, people arrived in California either overland with horse and carriage or by boat. In 1869, with the final spike driven in by Leland Stanford, joining the rails of the Transcontinental Railroad, people and goods began to arrive in California via the railroad.

Henry Weyl

Henry Weyl was born in Bingen on the Rhine, in Germany on May 29, 1834. His parents, Henry and Anna (Beck) Weyl were natives of Bingen, and young Henry followed in his father's footsteps as a cooper and distiller. Henry left his native Germany in 1854 and set his sights on America. He arrived in New York and obtained a job as a cooper in both New York and Williamsburg, until 1855. He found employment on a whaling ship commanded by Captain Seaburg heading for the North Pacific. Weyl worked on the ship for four years and in 1859, when the ship returned to New Bedford, he got employment on the Cotiyress, commanded by Captain Swift. This whaling ship would travel around Cape Horn to the Pacific Ocean.

Upon arrival in Callao, Peru, Weyl left the ship and obtained work as a cooper, blacksmith and carpenter. After a few months, he moved to Guayaquil, Ecuador, where he was hired as a carpenter and stair builder. From Guayaquil he headed north to Panama and was hired as a butcher on the steamer Sonora. The Sonora was one of several Pacific mail vessels headed north along the Pacific coast, arriving in San Francisco on December 14, 1860.

Weyl was hired by P. Malloy working as a cooper until 1862. It was in San Francisco that Weyl met Henry Gerke, who was the superintendent and manager of a ranch in Tehama county which produced wine and brandy. Weyl moved to Tehama County to work at the ranch, but within a few months, became ill and returned to San Francisco. He remained in San Francisco until 1867, when he arrived in Sonoma where he established a cooper shop. Weyl's first land acquisition in 1867 consisted of purchasing two parcels of land on Lot 34, directly across the street from the Weyl House.

In 1868, the 7th District Court of Sonoma County registered a complaint, Case No. 943, Henry Weyl vs. Elenore Weyl. This complaint consisted of a decree of divorce and that the "whole of the property be set apart..." The marriage was dissolved and Henry Weyl maintained sole ownership of the property which was situated on Lot 34, across the street from the Weyl House. In 1869, he married Miss Mary Knacksatet. The Weyl's had six boys and two girls.

Henry Weyl purchased two parcels on Lot 27 in 1871 and one in 1874. His land acquisition on Lot 27 now totaled about 5 acres. The Weyl House was constructed within Lot 27 and was one of several buildings constructed by Weyl, including a winery and lumber yard within the five acre parcel. Though successful in Sonoma, he moved to Petaluma in 1877, where he established a wholesale wine and liquor business. Weyl purchased two parcels of land in Petaluma in 1878 and 1881. He returned to Sonoma in 1879 and began to extensively improve his land situated on the northwest corner of Sonoma's historic Plaza within Lot 27.

Weyl operated a winery on Lot 27, depicted on the 1888 and 1897 Sanborn insurance maps. The winery is not depicted after 1897. In 1876, a law was passed by Congress requiring wine producers to store their wine and brandy in bonded warehouses. They were also required to pay a revenue duty of seventy cents per gallon when the brandy was sold for consumption. Weyl and his partner Leiding produced 15,000 gallons of wine and 1,000 gallons of brandy in 1877. Total wine production for Sonoma County in 1877 was 2,535,000 gallons (Thompson & Co. 1877).

In 1879 "He erected a large two-story building, containing three storerooms on the first floor and a hall in the upper story. This building was constructed at the corner of first Street West and Vallejo (Spain) Street at the location of a former adobe constructed by Marcus Vaca. He also completed a fine two-story residence [most likely the Weyl-Churchill House located at 180 West Spain Street], and in the same year added to his business enterprises by opening a butcher shop and market in connection with Herman Nanert" (Lewis 1889). Weyl bought Nanert's share of the business in 1880 and began to operate independently, opening a general merchandise store in 1884. *The Illustrated Atlas of Sonoma County, California* (Reynolds & Proctor 1898) states that "one of the important buildings on a corner facing the plaza is the hall constructed by Henry Weyl..."

This building became commonly known as Weyl Hall. The ground floor included market businesses with a succession of butchers, grocers and saloons. The Sonoma Index stated:

> William Jones, recently from San Francisco, is fitting up the corner store in Weyl's new building with shelving, etc., preparatory to putting in a line of goods, groceries etc. Mr. Jones looks like a pleasant, active business man and we welcome him among us.

Mr. Jones called his business the Cheap Cash Grocery and Weyl opened up a butcher shop at the same time (Sonoma Index, June 5, 1880).

"The second floor of the Weyl building was a hall with a stage and a high ceiling which was two stories above the floor. Weyl's Hall was the scene of social and theatrical events for many years. The Sonoma Brass Band practiced and gave concerts here (Alexander, 1986) " Today, this building located at 110 West Spain Street, is the Sonoma Hotel.

Within a decade, the five-acre parcel on Lot 27 purchased by Weyl in 1879, contained at least six buildings and associated smaller outbuildings. Several business, including Weyl's winery was located on the parcel. On the 1888 and 1889 Sanborn insurance maps, three buildings within Lot 27 were designated as "Chinese dwellings".

In 1882, Weyl purchased 100 acres of farm land about 2 miles north of Sonoma, in what is now known as Mission Highlands. Approximately half of this land was used to produce grapes and fruit, while the other half was used for stock purposes. Weyl owned Holstein and Jersey cattle, Norman and Clydesdale draft horses and Patchen roadsters known for pulling light carts.

In 1886, Weyl was involved in a strong movement to remove the railroad from Spain Street. Many of Sonoma's residents fought it's development and presence in Sonoma, concerned that the railroad would take business out of town. Though objectors began to remove ties in front of their properties, eventually the train came to town as promised. The train operated down Spain street which Henry Weyl objected to. Weyl won a suit in 1886 against the Donahue Railroad and forced the company to obtain new rights outside of town. In 1890, a new depot was constructed immediately north of the Plaza.

Weyl continued to purchase parcels on the north side of West Spain, acquiring a parcel in Lot 28 in 1887, situated immediately west of Lot 27.

In 1890, Weyl spent most of his time running a market business. He also grew fruit and grapes on his ranch north of Healdsburg and operated a stone quarry in the hills north of Sonoma. The quarries produced basalt pavers for sale in San Francisco.

Henry Weyl was a member of the City Board of Trustees from 1886-87 and 1893-94, serving as President (mayor) in 1887 and 1894. Weyl was instrumental in developing City ordinance No. 43, which proposed to fix water rates in the City of Sonoma beginning on July 1, 1893. The ordinance set rates for saloons, livery stables, barber shops, flower gardens, butcher shops and bakeries. Section 2 of Ordinance No. 43 imposed a charge of $2.50 for "neglecting to turn off water or permitting the water to run through hose, sprinkler or faucet." As President of the Board of Trustees (Mayor) he approved the ordinance on May 3, 1893. (Sonoma Book of Ordinances 1883)

In 1902, he began talking about converting Weyl Hall into a hotel. He died on July 5, 1902 and did not see his vision come to fruition. It wasn't until 1922, when Samuele Sebastiani purchased the property, that Weyl Hall was converted into a hotel, first known as the Plaza Hotel.
The *Illustrated History of Sonoma County* (1888) states:

> Mr. Weyl is one of Sonoma's most progressive and public spirited citizens. A strong believer in the future wealth and prosperity of the beautiful Sonoma Valley, he is always ready with time and money to aid and encourage any enterprise that will build up and develop its wonderful resources. A residence of over twenty years in Sonoma has made him well known, and his straightforward and consistent mode of life and manner of dealing with his fellow men have gained him hosts of friends. In 1886 and 1887 he was a member of the City Board of Trustees and has also served for several years as school trustee in his district. He is a member of Temple Lodge, No. 14, F. & A. M., of Sonoma. In politics, Mr. Weyl is a consistent Republican, taking an intelligent interest in all the political questions of the day.

He was a charter member of the volunteer fire company established in 1888.

Architecture
162-164-166 West Spain Street

This building is a two-story wood frame house with a wood gable roof and siding. The gable has a broken pediment with a decorative barge board. The building was recorded by the Sonoma League for Historic Preservation (League) as a part of their 1978-79 historical survey. In the survey, it states "the door is covered by a bell-shaped hood with finial." This feature is no longer extant.

This American foursquare-like home is an example of Victorian era architecture. Victorian construction embraced new materials and technologies, creating unique, one of a kind homes. Because of mass production and transit, ornamental pieces became more affordable and easier to obtain. Decoration was generally applied liberally. Beginning around the 1880's, a paradigm shift occurred, as many new home builders began to frown upon such extravagant architecture, shifting to more simple and box-like constructions. The Weyl House is an example of this shift from extravagant to simple.

The southern portion of the building faces Spain Street. The upper floor has three sash windows and the lower floor contains two. The front door is situated at the west portion of the home. The eastern portion of the building has 4 sash windows on the upper floor and two on the bottom. The western portion of the house has two upper sash windows and a doorway and side window on the ground level. The northern portion of the building contains an addition situated at the rear of the building. It is not known when this feature was completed. Historically, Sanborn insurance maps depict a back porch which was probably filled in sometime after 1923. The 1891, 1897 and 1905 Sanborn maps depict a porch at the northeast corner of the building leading to what appears to be an attached smaller building also in the northeast portion of the property. This building is not depicted on the 1888 Sanborn, suggesting that it was constructed sometime after 1888. The back building is not depicted on the 1923 Sanborn, suggesting that it was removed sometime after 1905. The back porch is depicted on all Sanborn maps from 1888-1923. The location and general configuration of the building appears to have remained the same since at least 1888.

The Sonoma League for historic Preservation stated that the exterior appearance of the building was in very good condition (Historical Survey 1978). A recent review of the building confirms that the building is still in very good condition.

EVALUATION

The Weyl House was evaluated under Criterion B. The period of significance is from 1880-1902. The building was constructed around 1880 as Henry Weyl began to aggressively develop Lot 27. The period of significance ends upon Henry Weyl's death. There is a strong historical association with Henry Weyl and the Weyl House located at 162, 164 and 166 West Spain.

For the Weyl House to be eligible under Criterion B, two elements must be established. First, it must be determined if the builder of the house, Henry Weyl was an important person in Sonoma's history, and second, there must be a direct link between Henry Weyl and the home at 162, 164 and 166 West Spain Street and be sufficiently intact to convey this relationship (National Park Service 1998).

Henry Weyl was a significant figure in Sonoma's history, whose prominence in the community is recognized in several illustrated atlases of Sonoma County in the late 19th century (Lewis 1889; Thompson 1877; Reynolds & Proctor 1897). In many ways, Weyl helped shape the town, quite literally. His opposition to the railroad was instrumental in having it moved from Spain Street and Sonoma's historic Plaza. Though many citizens complained about the railroad and its' location, it was Henry Weyl that took it upon himself to sue the Donahue Railroad Co., eventually winning the suit filed in 1886.

Henry Weyl was an important land owner, developing his property for commercial businesses. Weyl Hall, now the Sonoma Hotel, is listed as a contributor to the Sonoma Plaza National Register District. While there were quite a few developers in the late 19th century in Sonoma, Henry Weyl was rather distinct, as he focused his attention and acquisitions on properties on both the north and south sides of West Spain Street and north along First Street West. His land acquisitions on West Spain span 20 years.

Weyl was a significant civic leader, serving on the City's Board of Trustees from 1886-87 and 1893-94. Weyl was the President (Mayor) of the Trustees in 1887 and 1893, shaping law and developing ordinances focused on water. He was also a charter member of the volunteer fire company established in 1888 and a school trustee for several years.

Henry Weyl was a significant and important individual in Sonoma's history. There is a direct link between Henry Weyl and the house at 162, 164 and 166 West Spain Street. Today, the Weyl House is one of only three buildings that have survived from Weyl's ownership and development of Lot 27. These buildings are historically tied to Weyl and his significant contributions to the City of Sonoma.

There have been changes to the Weyl House over time. These include the replacement of sash windows with modern sash windows and the removal of elements such as the "bell-shaped hood with finial" covering the door as described by the League in their 1978 historical survey. An outside deck with stairs has been attached to the second floor at the rear of the building. All other features appear to be of original construction and maintain aspects of integrity including setting, location, feeling, materials, design, workmanship and association. If Henry Weyl were living today, the building, for the most part, would be just as recognizable to him today as it was in 1880. The direct link between Henry Weyl and the home at 162, 164 and 166 West Spain Street, is "sufficiently intact to convey this relationship (National Park Service 1998)."

CONCLUSION

The Weyl House located at 162, 164 and 166 West Spain Street is eligible for listing on the National and California registers under criterion B.

REFERENCES CONSULTED

Alexander, James B.
1986 Sonoma Valley Legacy: Histories and Sites of 70 Historic Adobes. Sonoma Historical Society.

Barrett, S.A.
1908 The Ethnography of the Pomo and Neighboring Indians. *University of California Publications in American Archaeology and Ethnology* 6(1): 1-332. Berkeley.

Bowers, A. B.
1867 *Map of Sonoma County, California.* Made and published by A. B. Bowers in accordance with an Act of the Legislature, approved 28 march 1863 with additions and corrections to September First 1867.

California Department of Parks and Recreation
1976 *California Inventory of Historic Resource.* State of California Department of Parks and Recreation, Sacramento.

California Department of Parks and Recreation
1990 California Historical Landmarks. Office of Historic Preservation, State of California.

California Office of Historic Preservation
1988 *Five Views: An Ethnic Sites Survey for California.* State of California Department of Parks and Recreation, Sacramento.

California Office of Historic Preservation
1996 *California Historical Landmarks.* State of California Department of Parks and Recreation, Sacramento.

Corbett, Michael R. and Marjorie M. Dobkin
1993 Historic Architectural Evaluation of The Hansen Hatchery, 796 and 800 West Spain Street, Sonoma, California.

Evans, Sally
2012 A Cultural Resources Evaluation of 821-845 W. Spain Street, City of Sonoma, Sonoma County, California. (APNs 127-211-021 & 127-211-022).

Kelly, Isabel
1978 Coast Miwok *in* William Sturtevant (editor), Handbook of North American Indians, Volume 8, California, Robert F. Heizer (volume editor), pp. 414-425. Smithsonian Institution, Washington, D.C.

Kroeber, Alfred
1925 Handbook of the Indians of California. *Bureau of American Ethnology* Bulletin 78. Smithsonian Institution, Washington, D.C.

Lewis Publishing Company
1889 An Illustrated History of Sonoma County. The Lewis Publishing Company, Chicago.

Menefee, C. A.
1873 *Historical and Descriptive Sketchbook of Napa, Sonoma, Lake and Mendocino.* Reporter Publishing House, Napa. Preprinted James D. Stevenson, Ph.D., Fairfield 1993.

Miller, Vernon C.
1972 *Soil Survey of Sonoma County, California.* U.S. Department of Agriculture in cooperation with University of California Agricultural Experiment Station.

Moratto, Michael J.
1984 *California Archaeology.* Academic Press, Inc. Orlando, Florida.

Munro-Fraser, J. P.
1880 *History of Sonoma County, California including its Geography, Geology, Topography and Climatography.* Alley, Bowen & Co., Washington, D.C. Republished 1972 by Charmaine Burdell Veronda. Petaluma.

Office of Historic Preservation (OHP)
2012 Directory of Properties in the Historic Property Data File for Sonoma County, California. List dated 04-05-2012. On file at the NWIC of the CHRIS and the OHP, Sacramento.

Origer, Thomas M.
1991 A Cultural Resources Study for the Sonoma Affordable Housing site at 820 West Spain Street, City of Sonoma, Sonoma County, California.

Reynolds and Proctor
1897 *Illustrated Atlas of Sonoma County, California.* Reynolds and Proctor, Santa Rosa.

Thompson, Thomas H.
1877 Historical Atlas of Sonoma County, California with Illustrations. Thomas H. Thompson, Oakland.

WEYL HOUSE REMODEL

162, 164, 166 WEST SPAIN STREET A.P. #018-780-006 SONOMA, CALIFORNIA

EXISTING LOWER FLOOR	conditioned space	1,144 SQ. FT.
EXISTING UPPER FLOOR	conditioned space	1,092 SQ. FT.
TOTAL EXISTING SPACE		2,236 SQ. FT.

Zoning:
DOWNTOWN DISTRICT PLANNING AREA ('R-M')
RESIDENTIAL - MEDIUM DENSITY
LOT SIZE = 7,405 SQ. FT. (.17 ACRES)
F.A.R. = 50% ALLOWED = 3,702 SQ. FT.
COVERAGE = 60% ALLOWED = 4,443 SQ. FT.

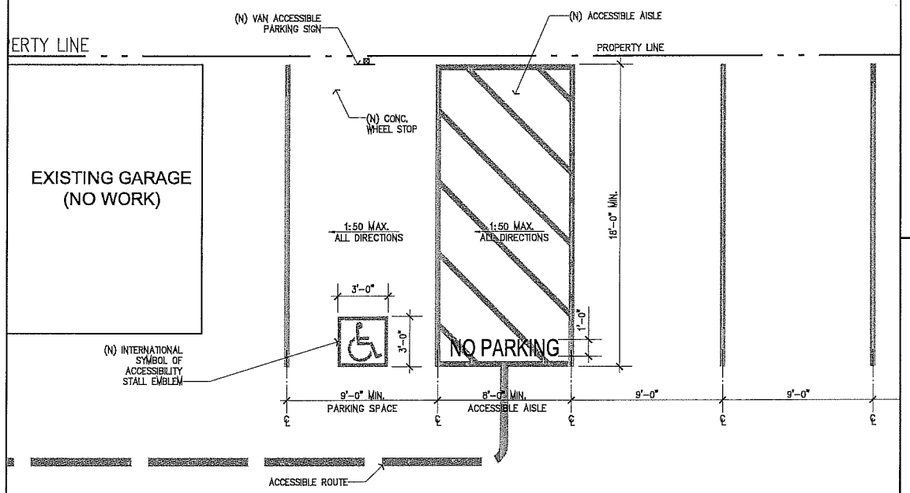

2 ACCESSIBLE PARKING SCALE: 1/4" = 1'-0"

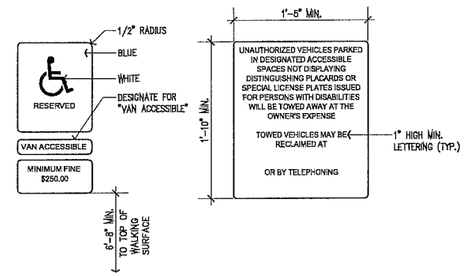

3 ACCESS. PARKING SIGNAGE SCALE: 1" = 1'-0"

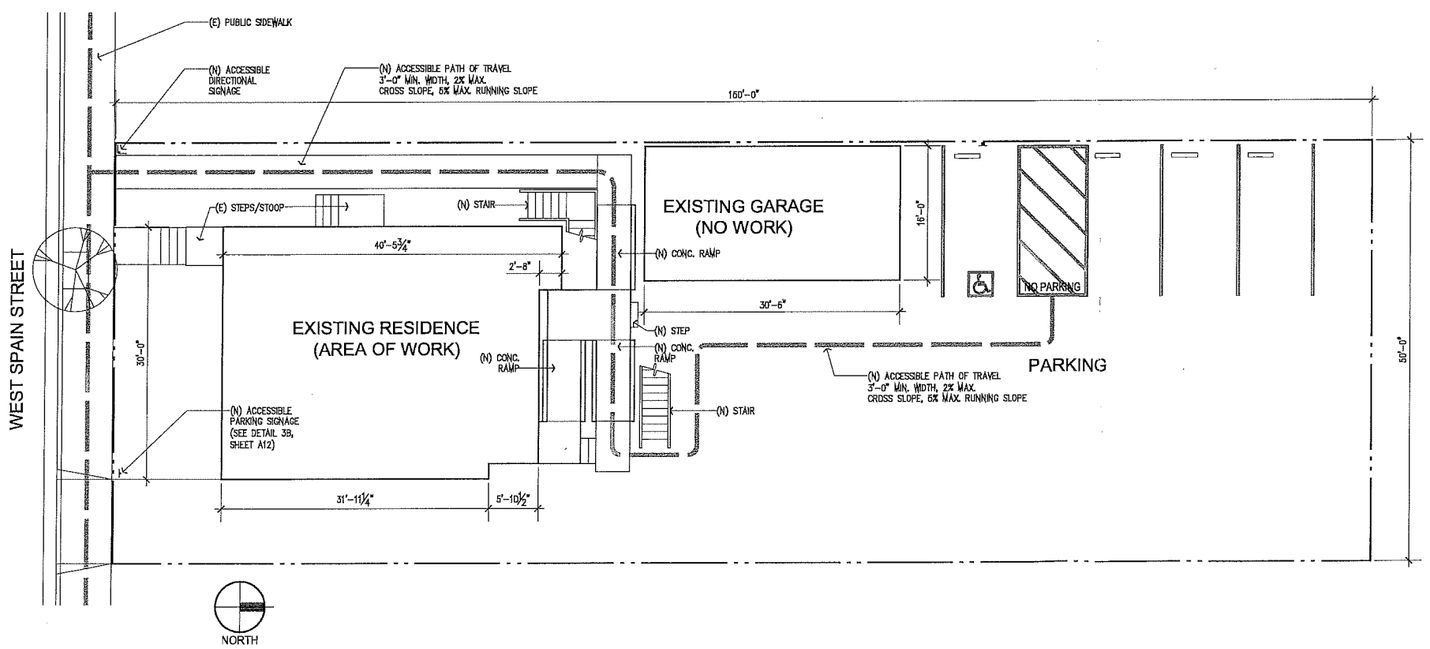

1 SITE PLAN SCALE: 1/8" = 1'-0"

SHEET INDEX

SHEET NO.	DESCRIPTION
1	SITE PLAN/ACCESSBILE PARKING/SHEET INDEX
2	EXISTING & PROPOSED ELEVATIONS

Thomas Anderson & Co.
822 Broadway
Sonoma, CA 95476
707 - 938 - 2148 office
707 - 938 - 5023 fax

Thomas Anderson & Co. is a division of Tectical Construction Solutions Inc.
Unauthorized reproduction of this document is strictly prohibited.

CONSULTANTS

ISSUE	DESCRIPTION	DATE
1	DRHPC	06-23-15

PROJECT

WEYL HOUSE REMODEL
162-166 WEST SPAIN STREET
SONOMA, CA 95476

TITLE
SITE PLAN
ACCESSIBLE
PARKING
SHEET INDEX

DRAWN JP
SCALE AS NOTED
CHECKED TA
DATE JUNE 23, 2015

SHEET 1 OF 2 SHEETS

JUN 23 2015

4 EXISTING EAST ELEVATION SCALE: 1/4" = 1'-0"

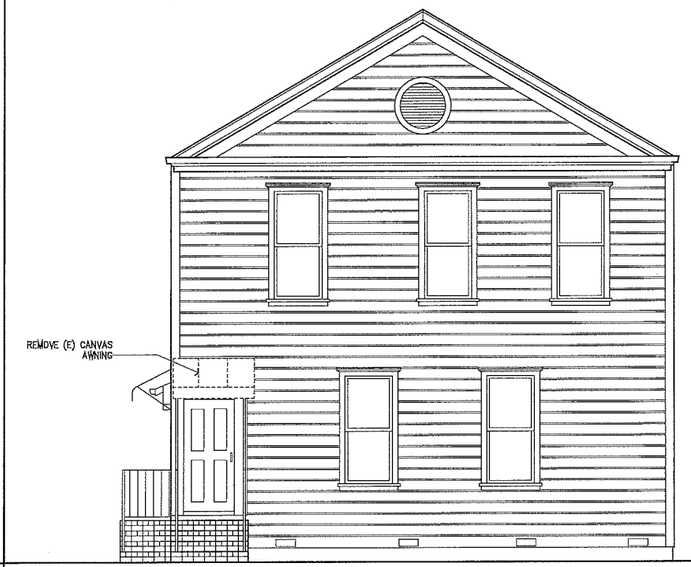

2 EXISTING SOUTH ELEVATION SCALE: 1/4" = 1'-0"

3 PROPOSED EAST ELEVATION SCALE: 1/4" = 1'-0"

1 PROPOSED SOUTH ELEVATION SCALE: 1/4" = 1'-0"

Thomas Anderson & Co.
822 Broadway
Sonoma, CA 95476
707 - 936 - 2146 office
707 - 936 - 5023 fax

Thomas Anderson & Co. is a division of Tactical Construction Solutions Inc.
Unauthorized reproduction of this document is strictly prohibited.

CONSULTANTS

ISSUE	DESCRIPTION	DATE
1	DRHPC	06-23-15

PROJECT

WEYL HOUSE REMODEL
162-166 WEST SPAIN STREET
SONOMA, CA 95476

TITLE
EXISTING & PROPOSED EXTERIOR ELEVATIONS

DRAWN JP
SCALE AS NOTED
CHECKED TA
DATE JUNE 23, 2015

SHEET 2 OF 2 SHEETS

JUN 23 2015

1 PROPOSED SOUTH ELEVATION

SCALE: 1/4" = 1'-0"

July 21, 2015
Agenda Item #3

M E M O

To: Design Review and Historic Preservation Commission

From: Associate Planner Atkins

Subject: Portable Freestanding Sign Regulations

Background

At the January 20, 2015 DRHPC meeting, the DRHPC discussed and heard public comments related to portable freestanding signs. Two approaches to revise the sign regulations were discussed in an attempt to provide consistent regulations: 1) allow "alley" business that front the Plaza the ability to apply to display portable freestanding signs in front of the business in the interior of an alley and remove the allowance for the Place de Pyrenees businesses to display portable freestanding signs on the Plaza sidewalk; or, 2) allow "alley" business that front the Plaza the ability to display portable freestanding signs on the Plaza sidewalk. Staff prefers the first approach as it would minimize the number of potential portable freestanding signs on the Plaza sidewalk. For example, if Mercato businesses were allowed to display portable freestanding signs on the Plaza sidewalk, then as many as 11 such signs could potentially be allowed within a 30-foot area of public sidewalk. This approach is inconsistent with the current prohibition on portable freestanding signs on sidewalks adjoining the Plaza and the former proliferation of "alley" business signs on public sidewalks was a significant factor in the City Council's decision to establish that prohibition. For those reasons, staff has drafted revisions to the sign ordinance based on the first option.

In addition, the DRHPC directed staff to work on a handout that would summarize the allowances for administrative review of portable freestanding signs and provide a number of examples of signs that could be approved administratively. Staff has included a draft Portable Sign Guideline Brochure for the DRHPC and the public to discuss and provide feedback. The main purpose of the handout is to provide guidelines of signs that could be approved administratively. The handout is in a draft form and has not yet been reviewed by the Sonoma Valley Economic Development Partnership.

Attachments:

1. Draft Portable Freestanding Sign Regulations
2. Draft Portable Freestanding Sign Guideline Brochure

cc: Portable Freestanding Sign Interest List

18.20.140 Portable freestanding signs.

A. Intent. It is the intent of this section to minimize the use of portable freestanding signs in order to minimize visual clutter and conflicts on sidewalks and to ensure that when portable freestanding signs are allowed that they are harmonious with their surroundings and distinctive in their design and creativity. Portable freestanding signs shall be allowed only when approved by the planning director or his or her designee upon a finding that special circumstances exist regarding the applicant's business location that require a freestanding portable sign. Examples of such special circumstances include, but are not limited to: (1) the business is not visible from the street on which it lies; (2) options for permanent signs have been exhausted; or (3) some other valid physical justification. Portable freestanding signs shall be designed so as to be compatible with the architecture of the building in which the applicant's business is located and compatible with other buildings on the same block and in the same vicinity as the applicant's business. Generic design, signs having an A-frame design, prefabricated signs, and plastic material shall be discouraged and shall be subject to DRHPC review.

B. Portable freestanding signs may be approved by the planning director or his or her designee anywhere in the city in conformance with this section except in commercial shopping centers with approved sign programs and on sidewalks surrounding the Plaza ~~with the exception of the Place des Pyrenees~~.

C. An applicant that moves his or her business to a new location must apply for a new approval if the applicant desires to place a portable freestanding sign at the new business location. Approval for a portable freestanding sign at one location is not transferable to another location.

D. The following limitations shall apply to portable freestanding signs:

1. If the lineal feet of street <u>or alley</u> frontage at the location at which an applicant desires to place a portable freestanding sign is less than 40 feet, the maximum allowable size of a freestanding sign shall be five square feet. The freestanding sign shall not exceed a maximum width of 24 inches and a maximum height of 48 inches.

2. If the lineal feet of street <u>or alley</u> frontage at the location at which an applicant desires to place a portable freestanding sign is 40 feet or greater, the maximum allowable size of a freestanding sign shall be six square feet. The freestanding sign shall not exceed a maximum width of 30 inches and a maximum height of 48 inches.

3. Portable freestanding signs shall be of stable construction and braced as necessary to prevent collapse or toppling. If a sign has wheels, the wheels must be capable of locking.

4. Portable freestanding signs shall be located on the property of the business which it advertises or on the sidewalk fronting that property. Portable freestanding signs for businesses located in alleys shall be located within fivefeet of the to the entrance of the alley business. Portable freestanding signs shall not be placed on the street. Portable freestanding signs located on sidewalks shall be located within two feet of the building frontage or the interior of a sidewalk. Portable freestanding signs shall be located so as not to obstruct pedestrian traffic or disabled person access and shall not be placed in a location that presents a hazard. A minimum sidewalk clearance of five feet shall be required. Portable freestanding signs shall not have any moving parts, projections, or lighting.

5. Only one portable freestanding sign shall be allowed per business. Portable freestanding signs authorized by the planning director or his or her designee shall not be counted against the number and aggregate sign area to which a property is otherwise entitled under this title.

6. No more than two portable freestanding signs shall be displayed at any time at one ~~building or~~ business property, except that each business located on an alley may be permitted to display one portable freestanding sign~~, except that the Place des Pyrenees alley businesses may be permitted to display a maximum of three portable freestanding signs at any one time at a building or business property~~.

7. Portable freestanding signs shall be displayed only during business hours.

8. There shall be at least 10 feet between portable freestanding signs~~, except that the Place des Pyrenees alley businesses shall be permitted a four-foot spacing between portable freestanding signs.~~

9. As a condition to the authorization of portable freestanding signs by the planning director or his or her designee, the applicant shall be required to furnish to the city proof of insurance and to execute an agreement obligating the permittee to indemnify and hold the city harmless from any action, claim or expense that may occur as a result of the placement of the portable freestanding sign on any sidewalk or public right-of-way. Any person who fails to furnish the required proof of

insurance and indemnification in connection with the placement of a portable freestanding sign shall be in violation of this chapter and the sign shall be subject to immediate removal by the city.

10. ~~At such time as vehicular traffic is no longer permitted at the Place des Pyrenees, portable freestanding signs shall no longer be permitted. All authorizations for portable freestanding signs issued by the planning director or his or her designee shall immediately terminate and be of no further force or effect. All temporary freestanding signs placed at the Place des Pyrenees after the date traffic is no longer permitted shall constitute a violation of this chapter.~~

E. Applications for portable freestanding signs that do not meet the limitations set forth above shall be subject to the review and approval of the DRHPC, which may, but is not required to, permit exceptions to the dimensional standards set forth above if it finds that:

1. The circumstances of the sign location or design necessitate the granting of such exceptions in order to provide adequate visibility, address unique site conditions, or provide for enhanced design quality or creativity; and

2. The proposed exception to dimensional standards is consistent with the intent of this section; and

3. The proposed exception to dimensional standards, if granted, would not result in the approval of a portable freestanding sign that is in excess of 72 inches in height. (Ord. 01-2015 § 1, 2015; Ord. 06-2013 § 3, 2013; Ord. 03-2011 § 1, 2011; Ord. 2000-9 § 1, 2000. Formerly 18.20.017).

Where are Portable Freestanding Signs allowed?

Portable Freestanding Signs are only allowed on the property where your business is located or on the sidewalk directly in front of the property. Each tenant may be allowed one Portable Freestanding Sign. These signs are not permitted within parking spaces or road right of ways. If a City staff member determines that your sign does not meet these criteria you will be asked to relocate your sign. Signs can not be used for off-site advertising.

Portable Freestanding Signs are not permitted for business that face the Plaza Park.

List of prohibited signs in the City of Sonoma

The following is a list of prohibited signs in all areas with the City of Sonoma:

- Moving signs: Moving sign structures, pennants, whirligigs, reflectors, reflective signs, moving lights, flashing lights, feather signs, and visible gaseous discharges are specifically prohibited.
- Animated signs: No person or animal shall use, carry, or wear any sign displaying a commercial message on private or public property.

When do I need to get a permit for a sign?

- All Portable freestanding Signs must receive a Sign Permit for the Planning Department. Proof of Insurance is required annually.

How can I obtain a permit??

You may visit the Planning Department office from 8 a.m. to noon and 1 to 5 p.m. Monday through Friday.

City of Sonoma
City Hall, #1 The Plaza, Sonoma 95476
(707) 938-3681 phone; (707) 938-8775 fax
www.sonomacity.org
Sonoma Valley
Economic Vitality Partnership
www.SonomaValley4Biz.com

SONOMA CHAMBER
A LOCAL MISSION

City of Sonoma 2015
Portable Freestanding Sign Guidelines Brochure

Why am I getting this sign brochure on portable freestanding signs?

The City of Sonoma has adopted regulations that allow local merchants to have portable freestanding sings on their property in order to help promote their businesses. Please keep this brochure as a guideline for future signs to help you determine what you are allowed to do under the current sign regulations. Should you have any questions about anything contained within this brochure, please do not hesitate to contact the Planning Department at (707) 938-3681.

What rules apply to Portable Free Standing Signs?

A portable freestanding sign as approved by the City of Sonoma must meet the following criteria:

- Portable freestanding signs are not permitted for businesses that face the Plaza Park.
- Portable freestanding signs may be approved by the planning director or his or her designee anywhere in the city in conformance except in commercial shopping centers with approved sign programs and on sidewalks surrounding the Plaza.
- Signs cannot be permanently installed in the ground.
- Signs may only be displayed during the hours that the business is open. Signs must be removed when the business is not open.
- Signs must be located on the property where the business is located or on the sidewalk in front of the business. The name of the establishment must appear on or be affixed to the sign within the allowed sign area.
- Signs may not be located in parking spaces. Signs must not interfere with pedestrian traffic or block sight lines for driv-

Examples of Portable Freestanding Signs that may be approved administratively

- Framed chalk board or eraser board signs with all of the wording on the sign hand drawn.
- Examples of border finishes may include : brushed steel; maple; or, reclaimed wood.

How much does it cost to get a sign permit for a portable freestanding sign?

- All portable freestanding signs require a Sign permit. The fee for administrative review of a Sign permits is$50. If review by the DRHPC is required the fee is $100.
- All permits require authorization from the property owner.
- Annual proof of insurance is required (naming the City as additional insured; providing a minimum coverage of 2 million per occurrence.

Portable Freestanding Signs

Some businesses like to use portable freestanding signs to draw in customers. Because portable signs can impede foot traffic and create visual clutter, approval requires a determination that special circumstances apply in terms of your business visibility.

Only one portable freestanding sign is allowable per business (even if located on private property), and there are requirements as to the sign's location, sidewalk clearance, hours of display, proof of insurance (naming the City as additional insured), etc. Sidewalk signs are not allowed on the Plaza.

The City encourages creativity in the design of freestanding signs and discourages use of prefabricated "A-frame" signs. Staff-level approval may be provided for signs of up to 5 square feet for properties with less than 40

Variances and Appeals

If your proposed signage does not conform to the requirements of the Sign Ordinance, there is a process for requesting a variance, which can be granted by the DRHPC if certain findings can be made. There's also an appeal process; any Planning Department staff action can be appealed to the Commission, and any action of the Commission can be appealed to the City Council. The full text of the City's sign ordinance can be found at sonomacity.org *(under "Find It Fast", click on Municipal Code).*