CITY OF SONOMA

STANDARD

PLANS

Updated January 1, 2014

CITY OF SONOMA

STANDARD PLANS

STANDARD PLAN INDEX

STREETS	100 SERIES
101	Residential Street Typical Section (1-1-14)
102	Collector Street Typical Section (1-1-14)
103	Arterial Street (4 lane with parking) Typical Section (1-1-14)
104-107	***No Current Plan Available***
108	Curb, Gutter and Sidewalk - Type B (1-1-14)
109	***No Current Plan Available***
110	Curb, Gutter and Sidewalk - Type B (1-1-14)
111	Residential Driveway (1-1-14)
112	Commercial Driveway (1-1-14)
113	Cross Gutter (1-1-14)
114	Sidewalk and Curb Drain (3-19-96)
115	Sign Post Installation (1-1-14)
116	Frame and Cover Adjustment (3-25-85)
117	Survey Monument Installation (3-19-96)
118	Dead-End Barricade (1-9-80)
119	***No Current Plan Available***
3 (formerly 120)	Tree Planting and Staking Installation (3-6-02)
121	Repair of Existing Curb, Gutter, Sidewalk & Driveway Approaches (1-1-14)
122	Street Name Sign Specifications (1-1-14)
123	***No Current Plan Available***
124	***No Current Plan Available***
125	Mailbox Location Details (3-10-81
126	Delineators (1-28-84)
127	Object Markers (3-2-84)

WATER	200 SERIES
253	Vertical Thrust Block Requirement (10-7-09)
254	Horizontal Thrust Block Installation (10-7-09)
257	Fire Hydrant Installation (10-7-09)
261	Blow-off Valve Installation (10-7-09)

263	1” Water Service (10-7-09)
265-A	1.5” Water Service (10-7-09)
265-B	2” Commercial Water Service (10-7-09)
266	Water Service 3” and Larger (10-7-09)
272	Sewer Encasement Detail (10-7-09)
274	Typical Backflow Prevention Assembly (D.C.V or R.P.) (10-7-09)
275	Double Check Valve Installation 1”, 1.5”, and 2” (10-7-09)
277	Water Valve Installation (10-7-09)
280-A	Fire Sprinkler Service-4” thru 8” (10-7-09)
280-B	Fire Sprinkler Service-4” thru 8” (10-7-09)
283	Air Release Valve (10-7-09)
286	Water Sampling Station (10-7-09)

STORM 300 SERIES

301	48” & 60” Storm Drain Manhole (2-21-86)
302	***No Current Plan Available***
303	Curb Inlet Catch Basin (5-11-87)
304	Curb Inlet Gutter Depression (3-19-96)
305	Storm Drain Connection without Manhole (11-28-78)
306	*Sack Riprap Installation

STREET LIGHTING 400 SERIES

400	Street Lighting General Notes (4-12-91)
401	Street Light Pole & Conduit Standard Locations (7-22-87)

MISCELLANEOUS 500 SERIES

501	Pipe Bedding & Backfill Requirements (4-11-91)
502	Silt Fence
503	***No Current Plan Available***

ENGINEERING 600 SERIES

601	Standard Drafting Symbols (11-28-78)
602	Standard Abbreviations (2-27-80)
603	Title Block for Private Engineers (11-28-78)

604	*Final Map Certificates
605	Standard Utility Locations (11-28-78)
606	Standard Street Name Sign Location (11-28-78)
607	***No Current Plan Available***
608	*Intersection & Driveway Visibility Requirements
609	***No Current Plan Available***
610	***No Current Plan Available***

CALTRANS STANDARD PLANS

A20A,B,C,D	Pavement Markers & Traffic Lines
A24A,B	Pavement Markings - Arrows
A24C	Pavement Markings - Symbols & Numerals
A24D	Pavement Markings - Words
A24E	Pavement Markings - Words & Crosswalks
A87A	Curbs & Driveways
A87B	Asphalt / Concrete Dikes
A88A	Curb Ramps
A90A	Accessible Parking - Off-street
A90B	Accessible Parking - On-street

**Standard Plan Not Yet Completed*

City of Sonoma

PUBLIC WORKS DEPARTMENT

LOCAL STREET TYPICAL SECTION

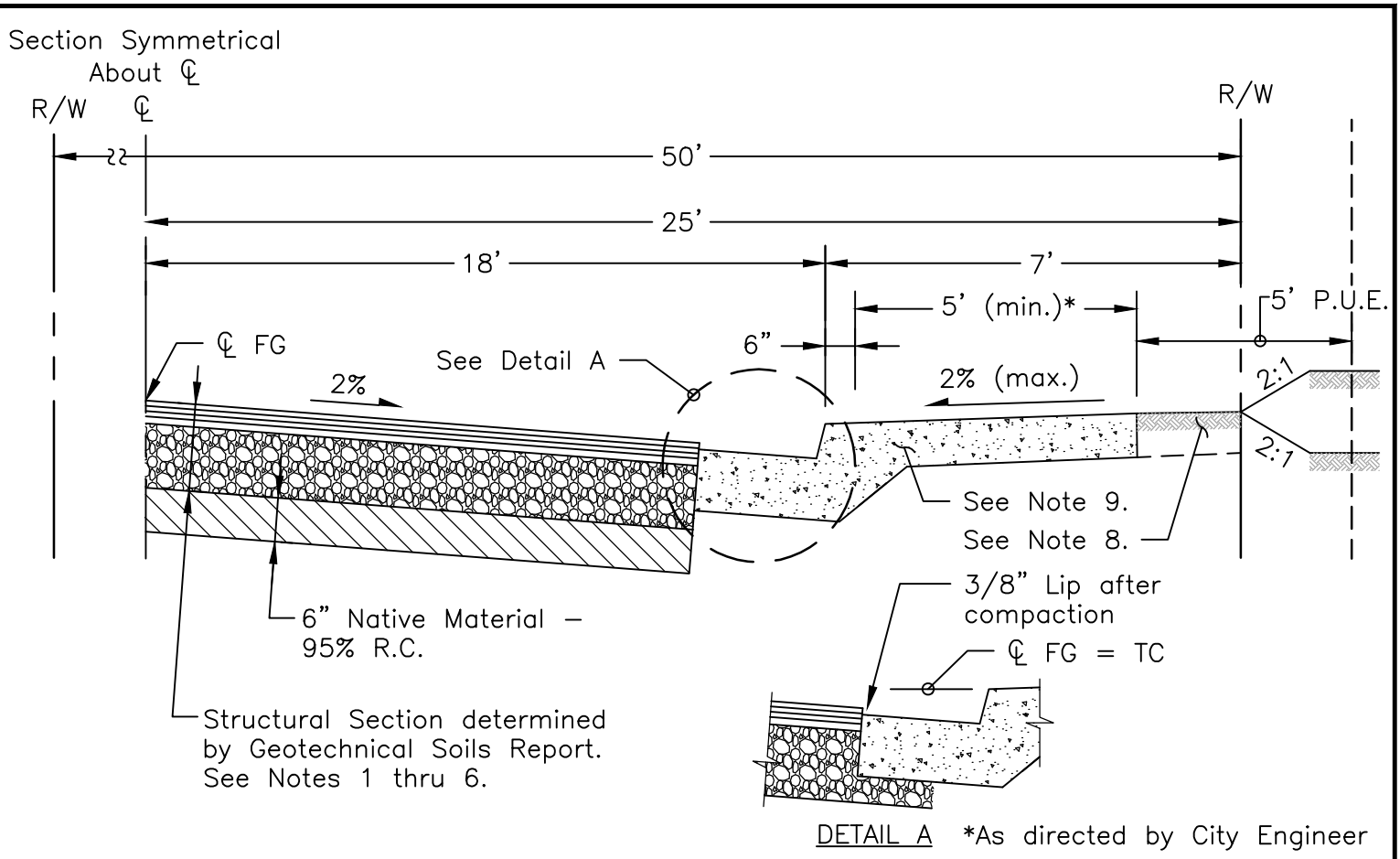

NOTES:

℄ = Roadway Centerline R/W = Right of Way P.U.E = Public Utilities Easement
R.C. = Relative Compaction FG = Finished Grade TC = Top of Curb
T.I. = Traffic Index (Calculation per Caltrans Highway Design Manual)

1. All work must conform to California Department of Transportation (Caltrans) Standards.
2. Hot Mix Asphalt (HMA): Type A, 1/2" max aggregate.
3. HMA Asphalt Binder: PG64–16.
4. Tack Coat: SS–1, SS–1h or RS–1 emulsified asphalt.
5. Aggregate Base (AB): Class 2 – 95% R.C.
6. Minimum structural section: 2" HMA over 8" Class 2 AB.
7. T.I. calculation must be approved by the City Engineer but in no instance less than 5.0.
8. The area between the R/W and back of sidewalk must be graded to 2% max. and sufficient compaction effort and moisture applied to this area to prevent settlement.
9. Curb, gutter and sidewalk must be Type A per Std. Plan 108 or Type B per Std Plan 110 as determined by the City Engineer.
10. Add "lamp black" color to PCC at a rate of 1 pound per cubic yard.
11. Minimum clearance of 36" sidewalk width to existing pole or other structure required.
12. Sidewalk must meet all Americans with Disabilities Act (ADA) requirements.

REVIEWED BY _____ CITY ENGINEER

APPROVED BY _____ PUBLIC WORKS DIRECTOR 1-1-14 DATE

The City of Sonoma or its officers or agents shall not be responsible for the accuracy or completeness of scanned copies of this sheet.

SCALE: NONE

STANDARD PLAN

101

City of Sonoma

PUBLIC WORKS DEPARTMENT

COLLECTOR STREET TYPICAL SECTION

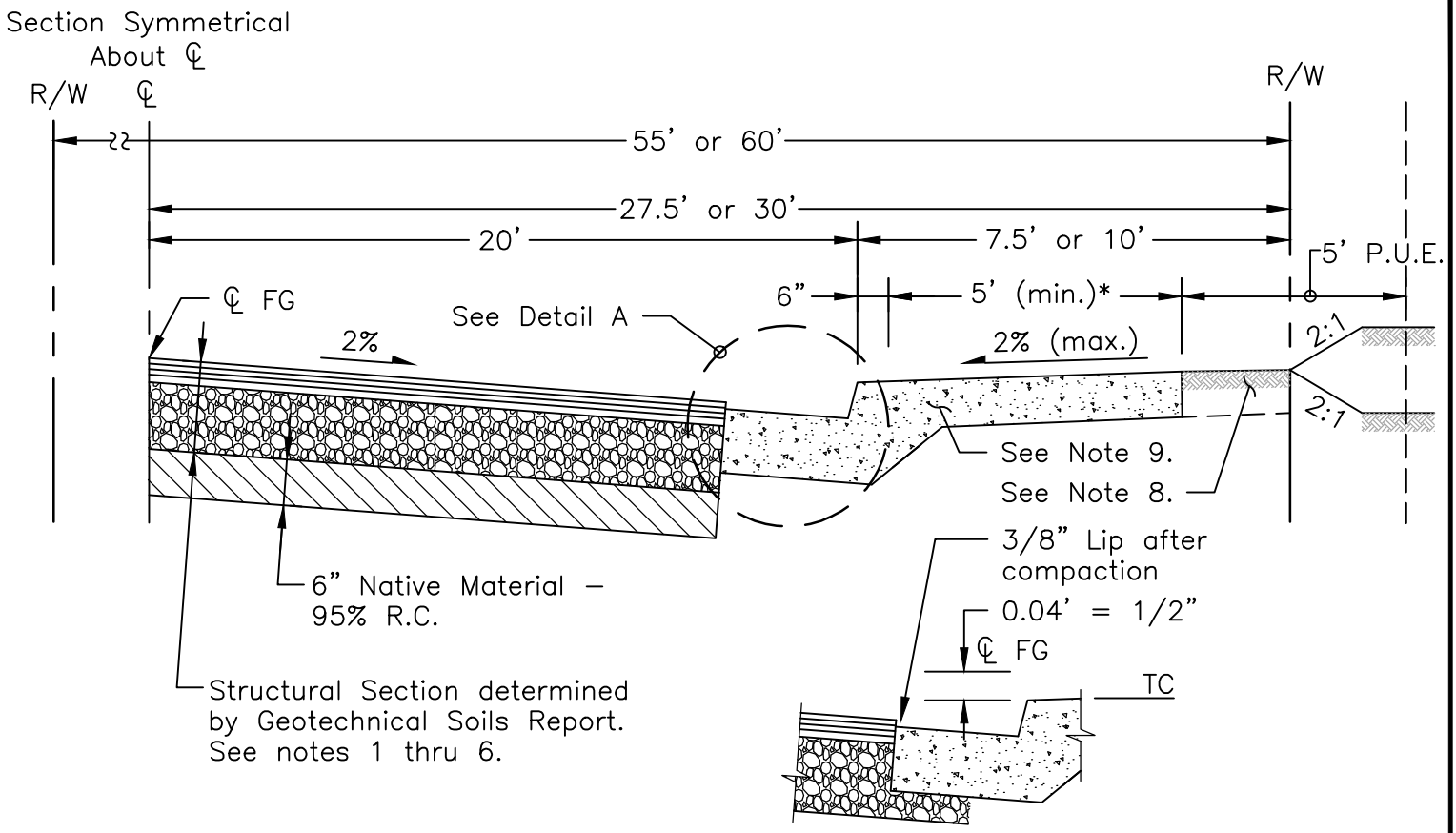

DETAIL A *As directed by City Engineer

NOTES:

℄ = Roadway Centerline R/W = Right of Way P.U.E = Public Utilities Easement
R.C. = Relative Compaction FG = Finished Grade TC = Top of Curb
T.I. = Traffic Index (Calculation per Caltrans Highway Design Manual)

1. All work must conform to California Department of Transportation (Caltrans) Standards
2. Hot Mix Asphalt (HMA): Type A, 1/2" max aggregate.
3. HMA Asphalt Binder: PG64–16.
4. Tack Coat: SS–1, SS–1h or RS–1 emulsified asphalt.
5. Aggregate Base (AB): Class 2 – 95% R.C.
6. Minimum structural section: 2–1/2" HMA over 8" Class 2 AB.
7. T.I. calculation must be approved by the City Engineer but in no instance less than 7.0.
8. The area between the R/W and back of sidewalk must be graded to 2% (max.) and sufficient compaction effort and moisture be applied to this area to prevent settlement.
9. Curb, gutter and sidewalk must be Type A per Std. Plan 108 or Type B per Std Plan 110 as determined by the City Engineer.
10. Add "lamp black" color to PCC at a rate of 1 pound per cubic yard.
11. Minimum clearance of 36" sidewalk width to existing pole or other structure required.
12. Sidewalk must meet all Americans with Disabilities Act (ADA) requirements.

REVIEWED BY _____
CITY ENGINEER

APPROVED BY _____ 1-1-14
PUBLIC WORKS DIRECTOR DATE

The City of Sonoma or its officers or agents shall not be responsible for the accuracy or completeness of scanned copies of this sheet.

SCALE: NONE

STANDARD PLAN

102

City of Sonoma

PUBLIC WORKS DEPARTMENT

ARTERIAL STREET
(4 LANES WITH PARKING)
TYPICAL SECTION

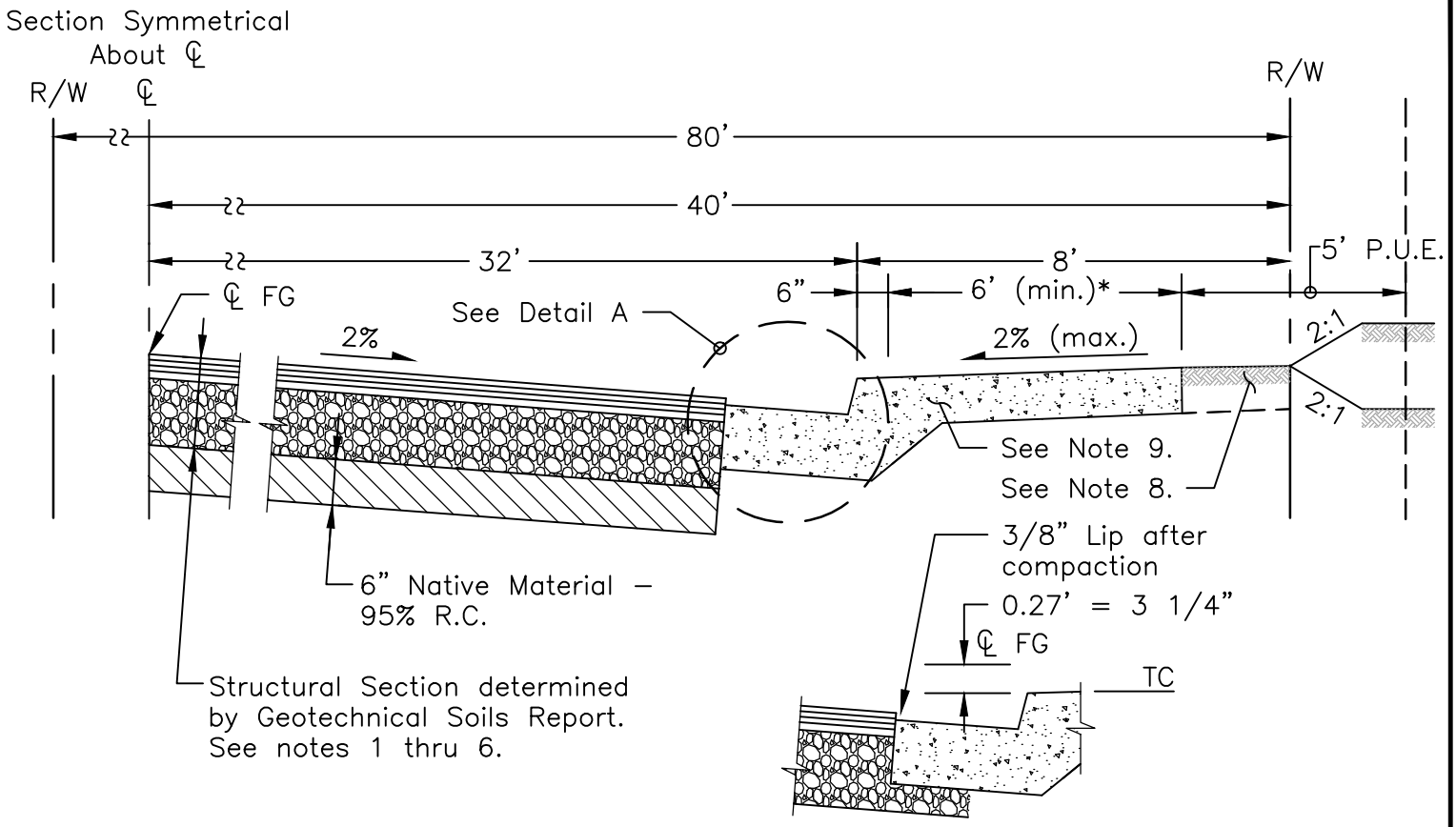

DETAIL A *As directed by City Engineer

NOTES:

℄ = Roadway Centerline R/W = Right of Way P.U.E = Public Utilities Easement
R.C. = Relative Compaction FG = Finished Grade TC = Top of Curb
T.I. = Traffic Index (Calculation per Caltrans Highway Design Manual)

1. All work must conform to California Department of Transportation (Caltrans) Standards.
2. Hot Mix Asphalt (HMA): Type A, 1/2" max aggregate.
3. HMA Asphalt Binder: PG64–16.
4. Tack Coat: SS–1, SS–1h or RS–1 emulsified asphalt.
5. Aggregate Base (AB): Class 2 – 95% R.C.
6. Minimum structural section: 3" HMA over 8" Class 2 AB.
7. T.I. calculation must be approved by the City Engineer but in no instance less than 9.0.
8. The area between the R/W and back of sidewalk must be graded to 2% and sufficient compaction effort and moisture applied to this area to prevent settlement.
9. Curb, gutter and sidewalk must be Type A per Std. Plan 108 or Type B per Std Plan 110 as determined by the City Engineer.
10. Add "lamp black" color to PCC at a rate of 1 pound per cubic yard.
11. Minimum clearance of 36" sidewalk width to existing pole or other structure required.
12. Sidewalk must meet all Americans with Disabilities Act (ADA) requirements.

REVIEWED BY _____
CITY ENGINEER

APPROVED BY _____ 1-1-14
PUBLIC WORKS DIRECTOR DATE

The City of Sonoma or its officers or agents shall not be responsible for the accuracy or completeness of scanned copies of this sheet.

SCALE: NONE

STANDARD PLAN

103

City of Sonoma

PUBLIC WORKS DEPARTMENT

CURB, GUTTER & SIDEWALK TYPE A

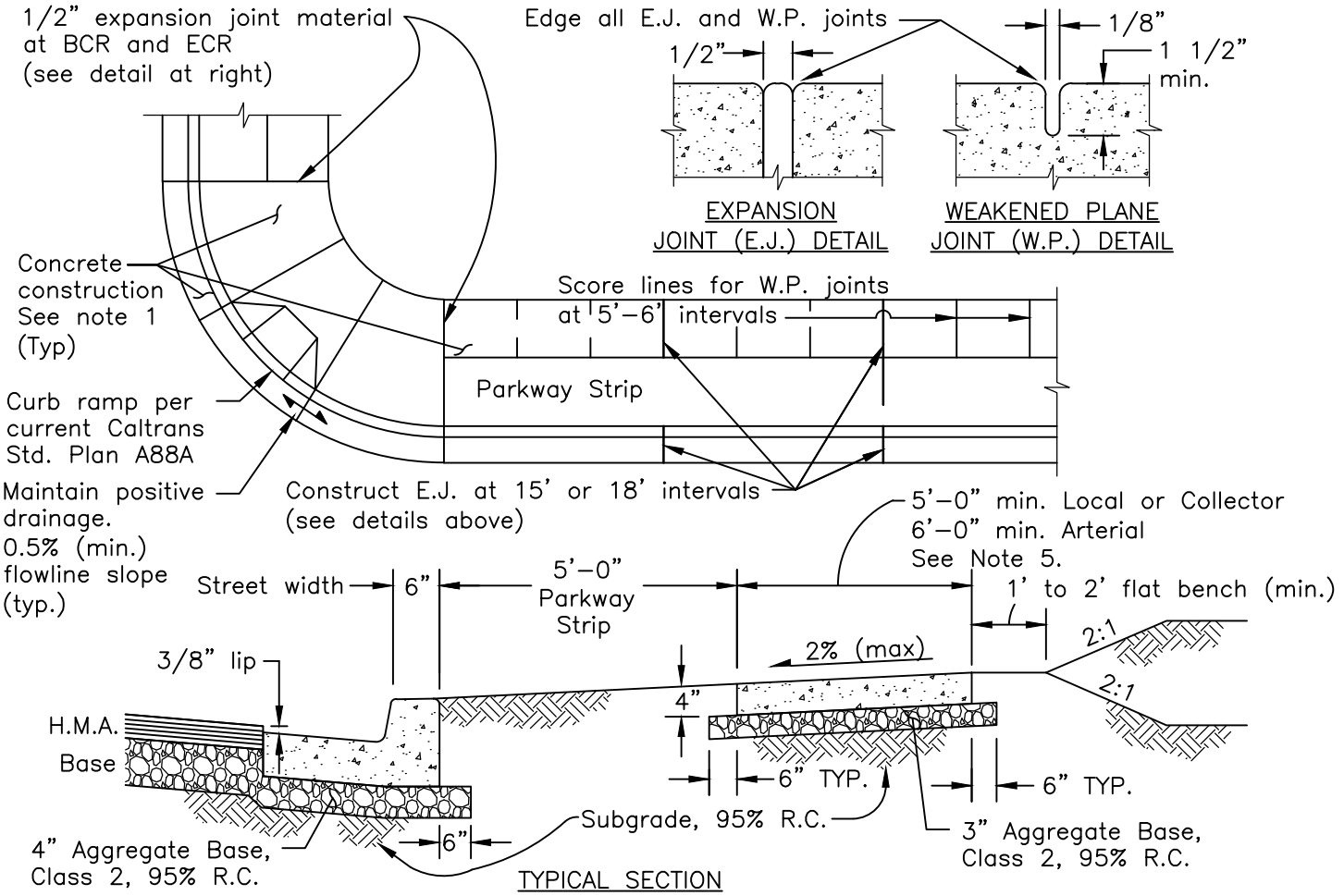

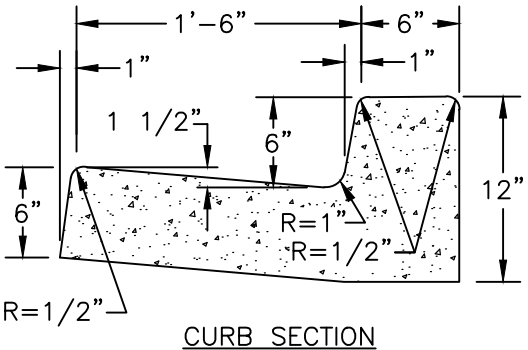

R.C. = Relative Compaction
H.M.A = Hot Mix Asphalt

NOTES:

1. Concrete Specifications, per Caltrans Section 90–2:
   Minor concrete: Cementitious material 505 lbs/cy (min);
   Aggregate: 3/4" (min), 1–1/2" (max)
   Water: Potable and free of oil, salts and other impurities;
   Slump/finish: 4" (max)/ light broom finish
2. No concrete shall be placed without prior inspection by the Public Works Inspector.
3. Add "lamp black" color to PCC at a rate of 1 pound per cubic yard.
4. Utility poles must not be located in sidewalk without City approval and shall be wrapped with 30 lb. felt to finished grade prior to placing concrete. Felt shall be trimmed. Minimum ADA clearance shall apply.
5. Sidewalk width and bench width may vary based on existing site conditions. Final width to be determined by the City Engineer.
6. For sign post installation requirements, see City Std 115.
7. For replacement of curb and gutter, sawcut minimum of 12" pavement to be removed and replaced with HMA.
8. Placement and type of street tree within parkway strip shall be approved by the City Engineer.
9. All construction shall meet Americans with Disabilities Act (ADA) requirements.
10. Maintain positive drainage for all improvements without any water ponding.

REVIEWED BY _____
CITY ENGINEER

APPROVED BY _____ 1-1-14
PUBLIC WORKS DIRECTOR DATE

The City of Sonoma or its officers or agents shall not be responsible for the accuracy or completeness of scanned copies of this sheet.

SCALE: NONE

STANDARD PLAN

108

City of Sonoma

PUBLIC WORKS DEPARTMENT

CURB, GUTTER & SIDEWALK TYPE B

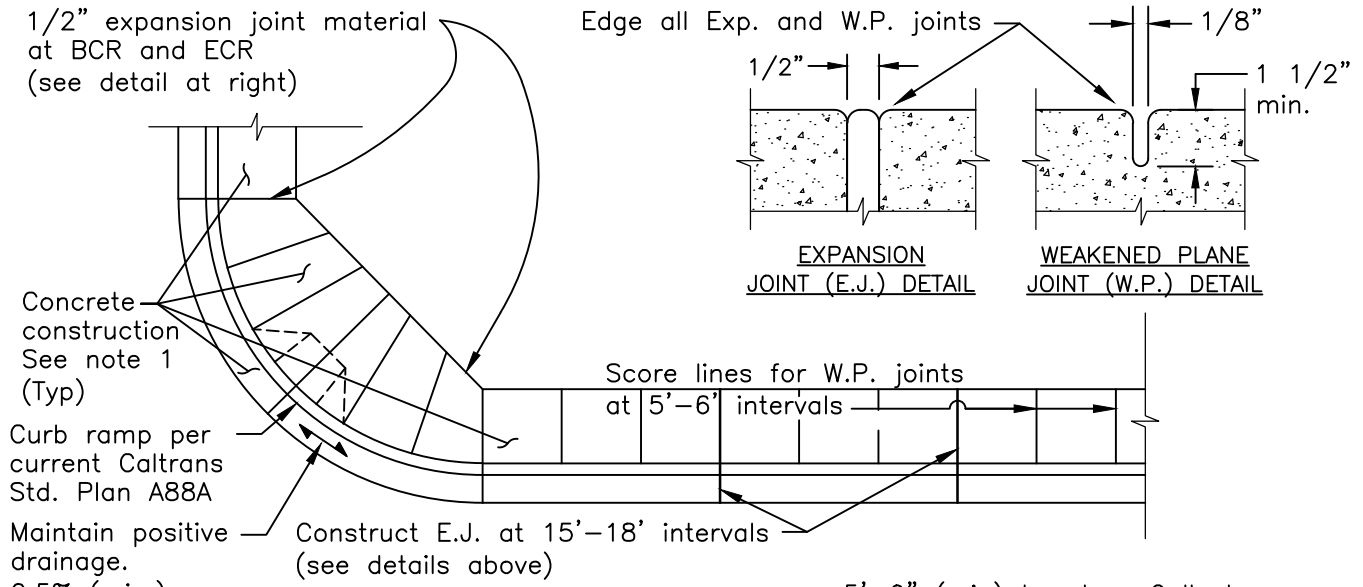

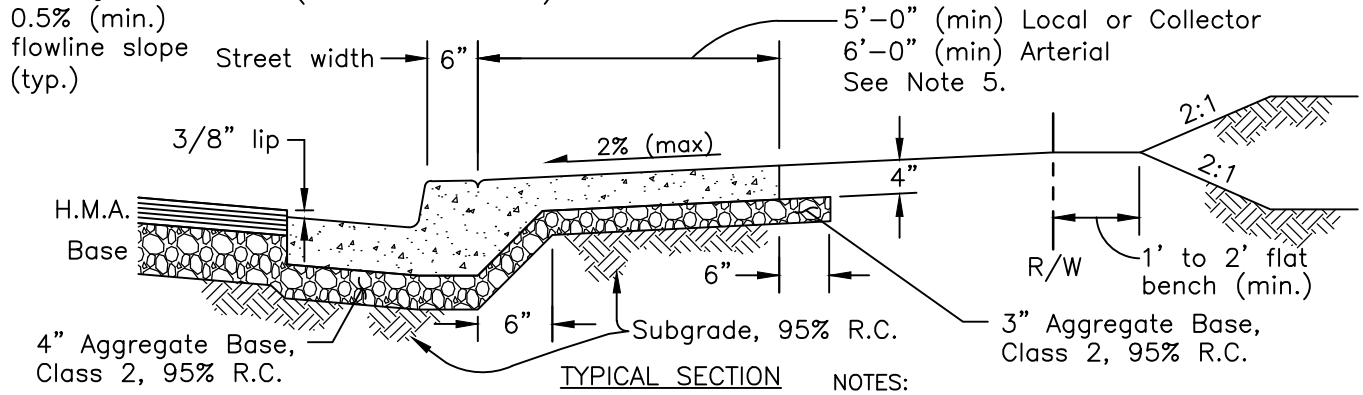

TYPICAL SECTION

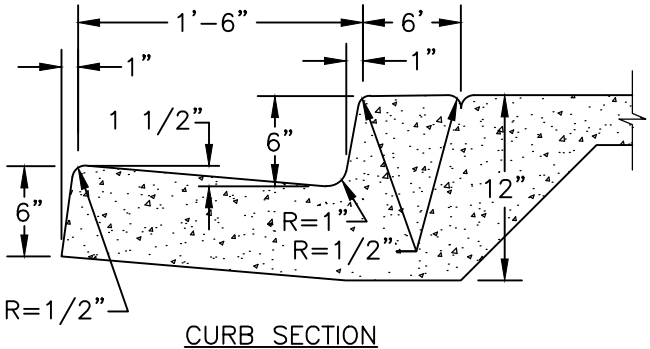

CURB SECTION

R.C. = Relative Compaction
H.M.A = Hot Mix Asphalt

NOTES:

1. Concrete Specifications, per Caltrans Section 90–2:
   Minor concrete: Cementitious material 505 lbs/cy (min);
   Aggregate: 3/4" (min), 1–1/2" (max)
   Water: Potable and free of oil, salts and other impurities;
   Slump/finish: 4" (max)/ light broom finish
2. No concrete shall be placed without prior inspection by the Public Works Inspector.
3. Add "lamp black" color to PCC at a rate of 1 pound per cubic yard.
4. Utility poles must not be located in sidewalk without City approval and shall be wrapped with 30 lb. felt to finished grade prior to placing concrete. Felt shall be trimmed. Minimum ADA clearance shall apply.
5. Sidewalk width and bench width may vary based on existing site conditions. Final width to be determined by the City Engineer.
6. For sign post installation requirements, see City Std 115.
7. For replacement of curb and gutter, sawcut minimum of 12" pavement to be removed and replaced with HMA.
8. Placement and type of street tree within parkway strip shall be approved by the City Engineer.
9. All construction shall meet Americans with Disabilities Act (ADA) requirements.
10. Maintain positive drainage for all improvements without any water ponding.

REVIEWED BY _____ CITY ENGINEER

APPROVED BY _____ PUBLIC WORKS DIRECTOR — 1-1-14 DATE

The City of Sonoma or its officers or agents shall not be responsible for the accuracy or completeness of scanned copies of this sheet.

SCALE: NONE

STANDARD PLAN

110

City of Sonoma

PUBLIC WORKS DEPARTMENT

RESIDENTIAL DRIVEWAY APPROACH

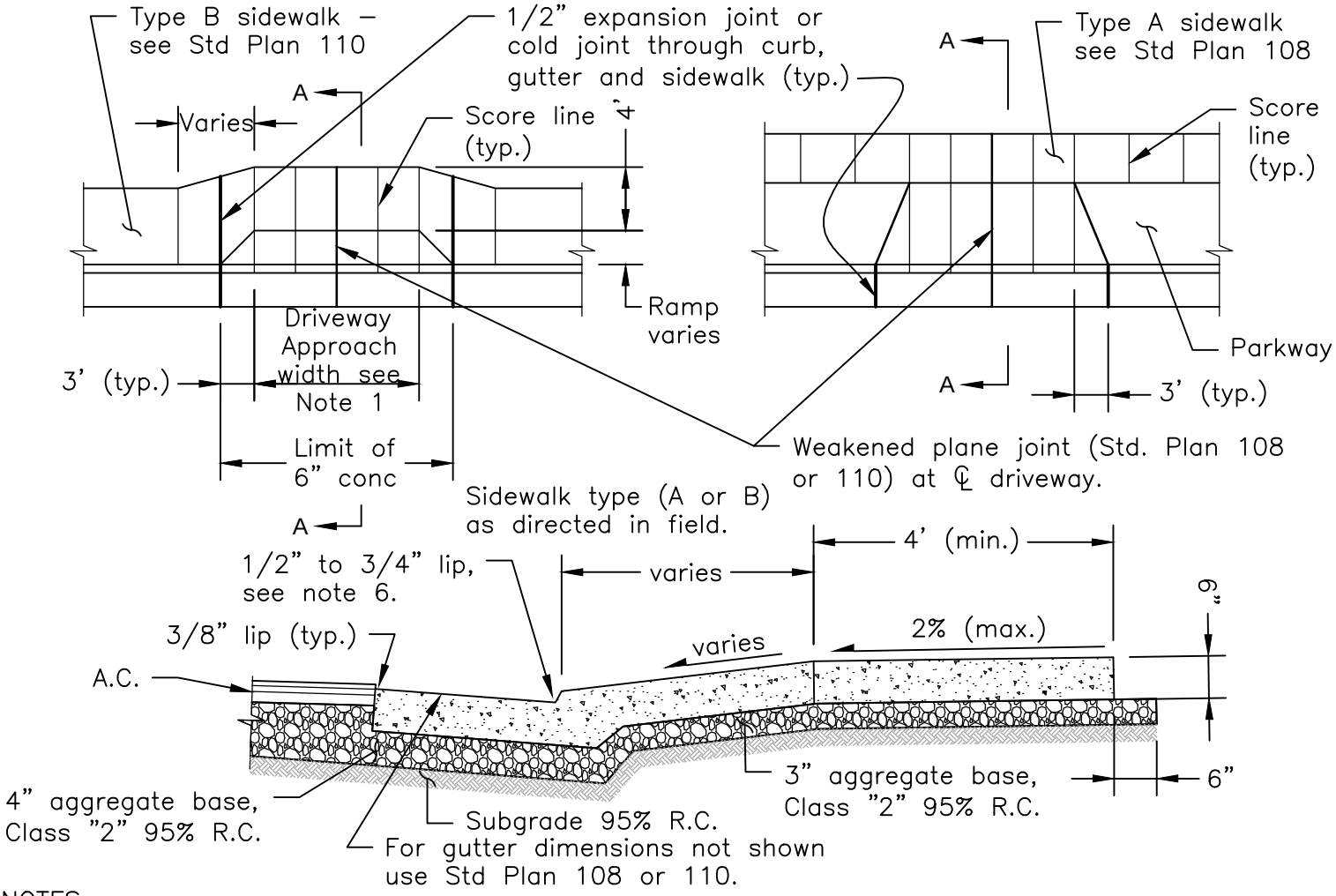

SECTION A–A

NOTES:

R.C. = Relative Compaction

1. Minimum residental driveway approach widths:
   Single Car Garage: 12 ft., Two Car Garage: 20 ft., Three Car Garage: 30 ft.
   Only one driveway cut per parcel is allowed unless approved by the Design Review Commission or Planning Commission.
2. Concrete Specifications; per Caltrans Section 90–2:
   Minor Concrete: Cement: 505 lbs/cy (min), Aggregate: 3/4" (min), 1–1/2" (max), Water: potable and free of oil, salts and other impurities, Slump/Finish: 4" (max) light broom finish.
3. Abandoned driveways shall be removed and replaced with standard curb, gutter & sidewalk. (Std. Plan 108 or 110).
4. Concrete removal shall be to the nearest expansion or cold joint or sawcut to a min depth of 2–1/2" at the nearest score line.
5. No concrete shall be placed without prior inspection by the City of Sonoma.
6. At bike paths, delete lip and construct ramp flush with gutter at flowline.
7. Driveway transition to sidewalk shall meet Federal ADA Standards for new or replacement driveway installations. Minor or no repairs to an existing driveway do not trigger Federal ADA Standards.

REVIEWED BY _____ CITY ENGINEER

APPROVED BY _____ PUBLIC WORKS DIRECTOR — 1-1-14 DATE

The City of Sonoma or its officers or agents shall not be responsible for the accuracy or completeness of scanned copies of this sheet.

SCALE: NONE

STANDARD PLAN

111

City of Sonoma

PUBLIC WORKS DEPARTMENT

COMMERCIAL DRIVEWAY APPROACH

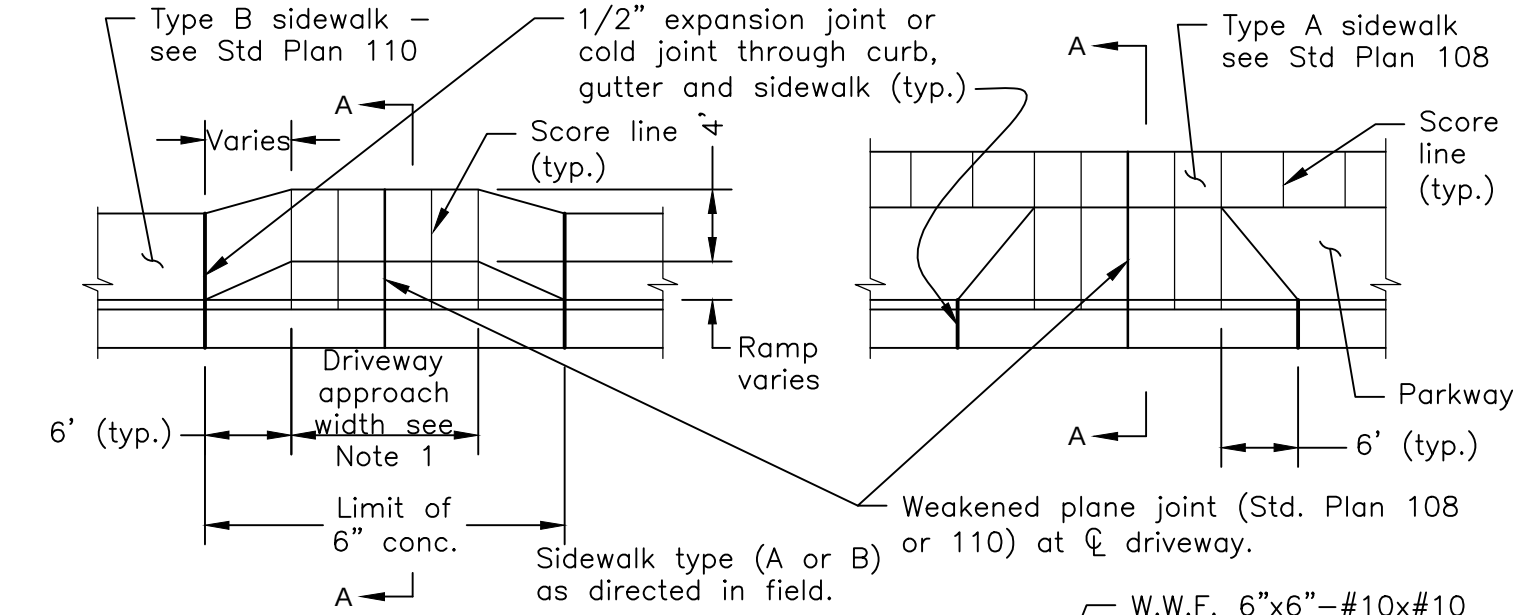

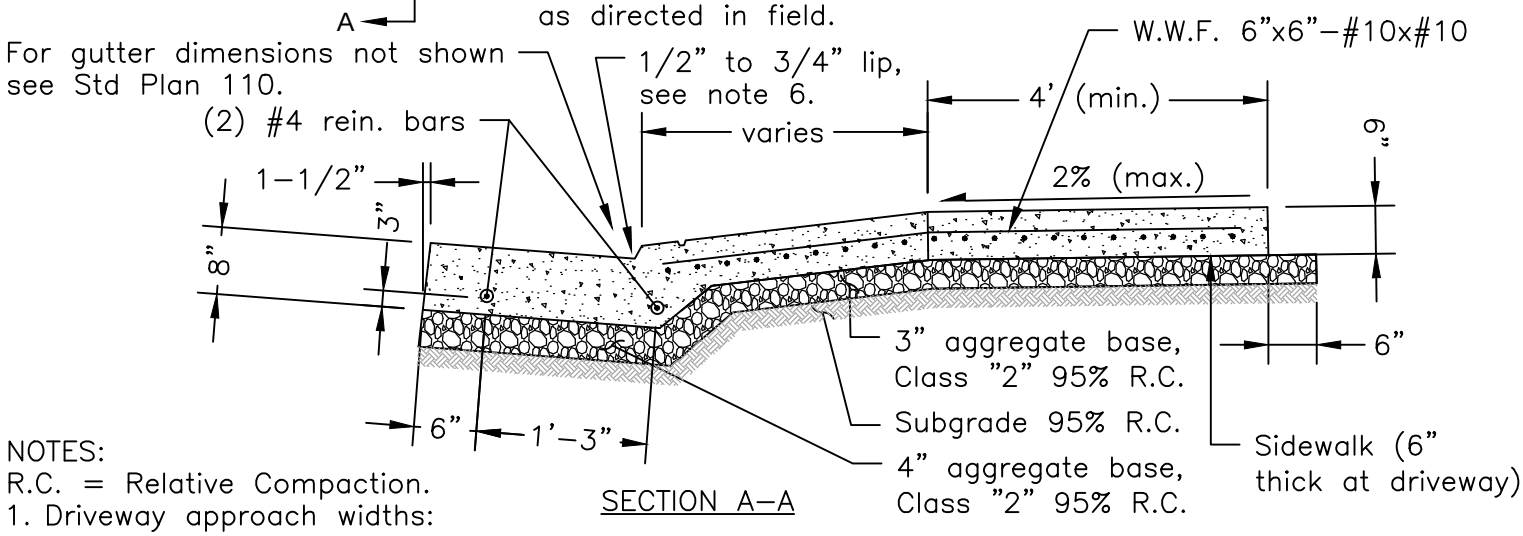

SECTION A–A

NOTES:

R.C. = Relative Compaction.

1. Driveway approach widths:
   Single Driveway: 12 ft. min, 14 ft. max
   Double Driveway: 24 ft. min, 30 ft. max
   Only one driveway cut per parcel is allowed unless approved by the Design Review Commission or Planning Commission.
2. Concrete Specifications; per Caltrans Section 90–2:
   Minor Concrete: Cement: 505 lbs/cy (min), Aggregate: 3/4" (min), 1–1/2" (max), Water: potable and free of oil, salts and other impurities, Slump/Finish: 4" (max) light broom finish.
3. Abandoned driveways shall be removed and replaced with standard curb, gutter & sidewalk.
4. Concrete removal shall be to the nearest expansion or cold joint or sawcut to a min depth of 2–1/2" at the nearest score line.
5. No concrete shall be placed without prior inspection by the City of Sonoma.
6. At bike paths, delete lip and construct ramp flush with gutter at flowline.
7. Driveway transition to sidewalk shall meet Federal ADA Standards for new or replacement driveway installations. Minor or no repairs to an existing driveway do not trigger Federal ADA Standards.

REVIEWED BY _____ CITY ENGINEER

APPROVED BY _____ PUBLIC WORKS DIRECTOR — 1-1-14 DATE

The City of Sonoma or its officers or agents shall not be responsible for the accuracy or completeness of scanned copies of this sheet.

SCALE: NONE

STANDARD PLAN

112

City of Sonoma

PUBLIC WORKS DEPARTMENT

CROSS GUTTER

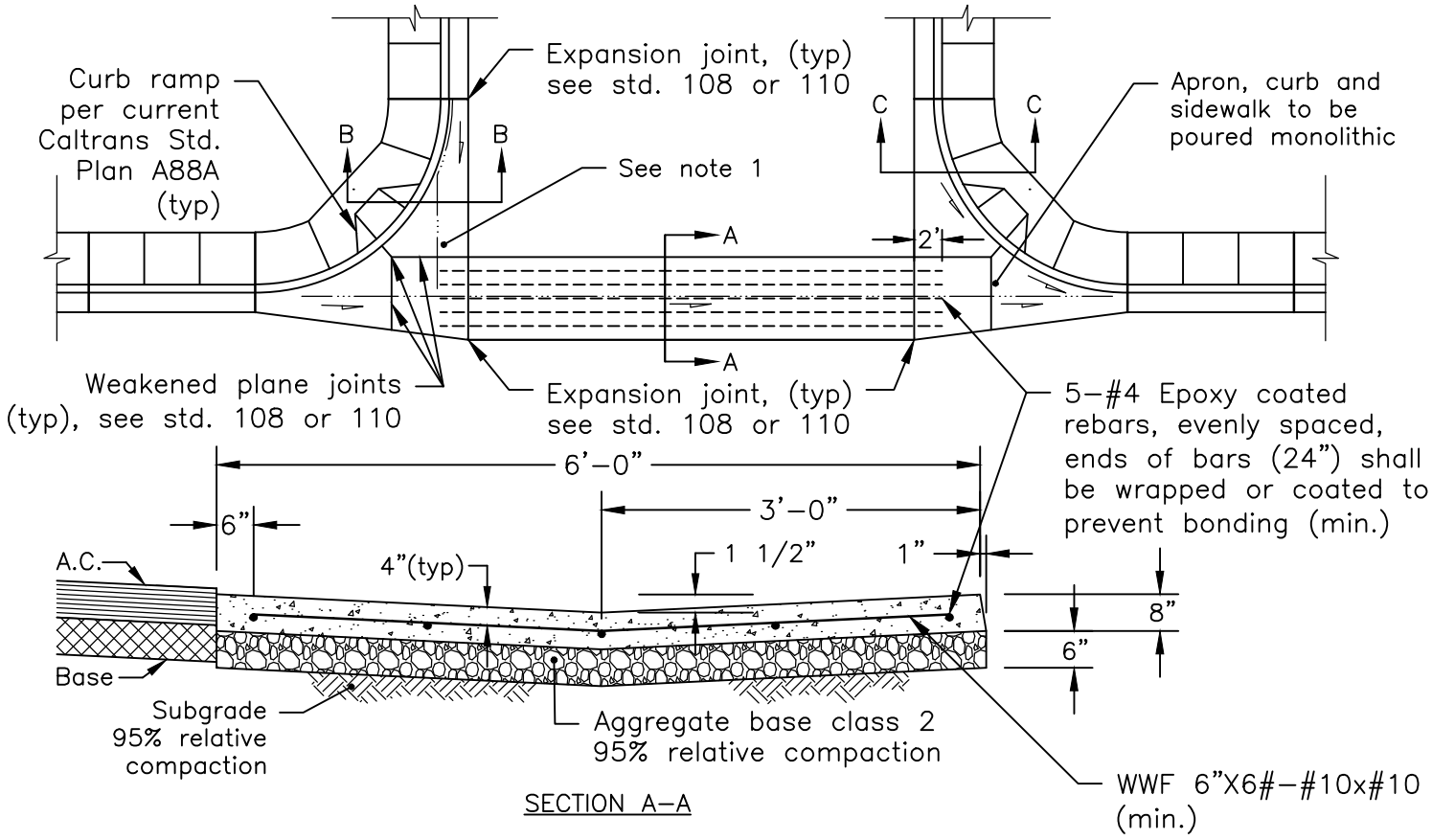

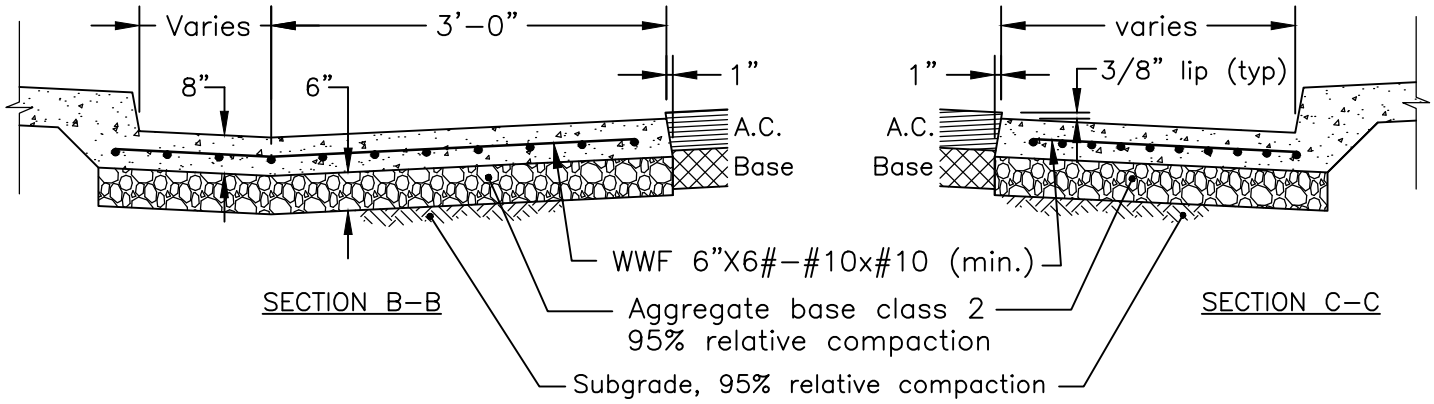

NOTES:

1. Concrete Specifications, per Caltrans Section 90–2:
   Minor concrete: Cementitious material 505 lbs/cy (min); Aggregate: 1" (min), 1–1/2" (max)
   Water: Potable and free of oil, salts and other impurities; Slump/finish: 4" (max)/ light broom finish
2. No concrete shall be placed without prior inspection by the Public Works Inspector.
3. Add "lamp black" color to PCC at a rate of 1 pound per cubic yard.
4. Flowline slope: 0.5% (min.)

REVIEWED BY _____ CITY ENGINEER

APPROVED BY _____ PUBLIC WORKS DIRECTOR — 1-1-14 DATE

The City of Sonoma or its officers or agents shall not be responsible for the accuracy or completeness of scanned copies of this sheet.

SCALE: NONE

STANDARD PLAN

113

City of Sonoma

PUBLIC WORKS DEPARTMENT

SIDEWALK & CURB DRAIN

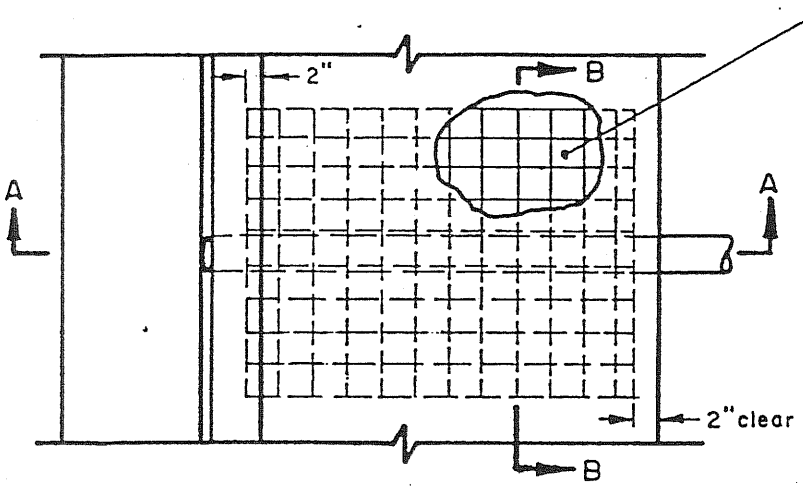

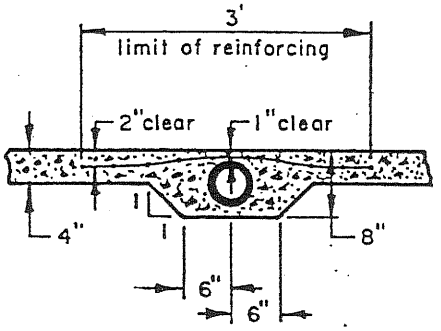

SECTION B—B

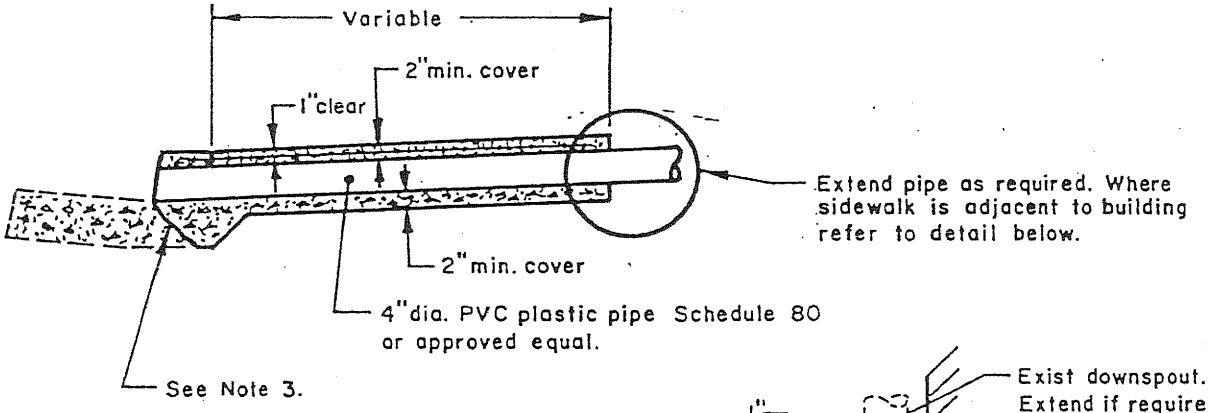

SECTION A—A

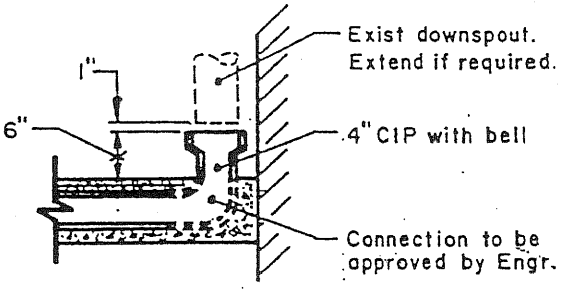

NOTES:

1. See Std. Plan 110 for curb, gutter and sidewalk details.
2. Conc. Specifications:
   Class B concrete per Caltrans specifications, 1" or 1 1/2" max. aggregate, 4" max. slump with light broom finish.
3. If curb, gutter and sidewalk are existing, the curb, gutter and sidewalk shall be sawed at the nearest scoremark to a depth of 1 1/2" and removed to limits shown. The gutter shall be left undisturbed.
4. No conc. shall be placed without prior inspection by the City of Sonoma.

APPROVED BY

Richard L. Rowland

PUBLIC WORKS DIRECTOR

DATE 4-12-77

NO.	REVISION DATE	BY
1	3-19-96	M.H.

STANDARD PLAN 114

City of Sonoma

PUBLIC WORKS DEPARTMENT

SIGN, POST AND FOUNDATION INSTALLATION

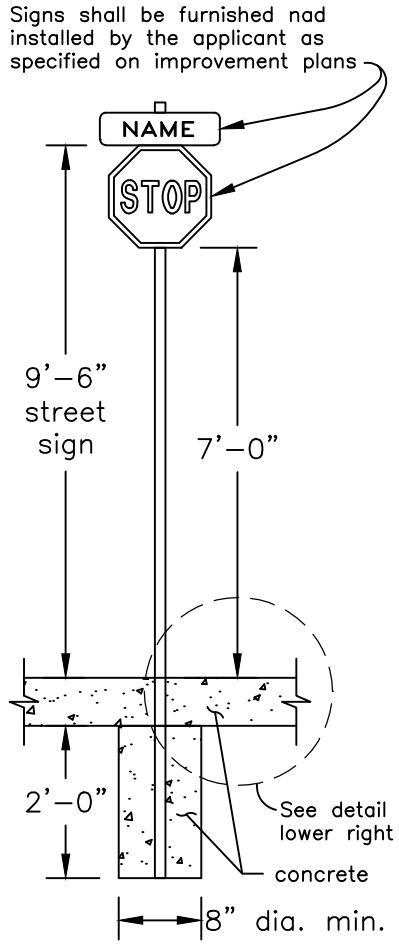

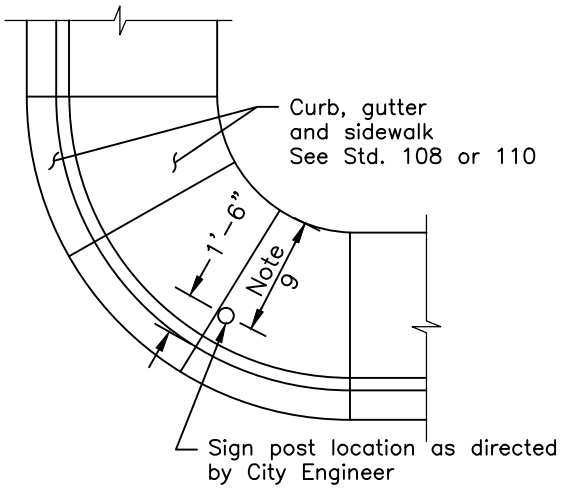

SIGN POST LOCATION

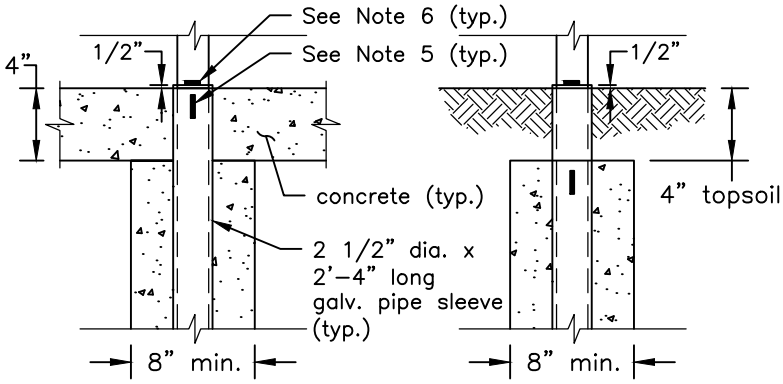

SIDEWALK INSTALLATION

DIRT INSTALLATION

NOTES:

1. Sign, post and foundation installation must meet requirements of current CA Manual on Uniform Traffic Control Devices (MUTCD) and all Americans with Disabilities Act (ADA) requirements.
2. Concrete for post installation per Caltrans Section 90–2:
   Minor concrete: Cementitious material 505 lbs/cy (min.);
   Aggregate: 3/4" (min.), 1–1/2" (max.)
   Water: Potable and free from oils, salts and other impurities;
   Slump: 4" (max.)
3. Posts shall be new 2" std. galv. pipe and shall be set plumb.
4. Where no street name sign is installed, post shall be capped by using a rounded post cap.
5. Three equally spaced 1/4" high welded beads 3" in length or City approved equal on pipe sleeve as shown.
6. Two equally spaced 1" long tack welds to post and sleeve.
7. See Std. plan 122 for street name sign specs.
8. Stop signs must be 30" x 30" (min.). All roadside signs must meet requirements of current CA MUTCD, including for reflectance and illuminance. Sign blanks must be 0.080 inches (min.) thick for all roadside signs. Base metal must conform to ASTM B209, of either 5052–H38 or 6061–T6 alloy. Signs must be manufactured by Hawkins or approved equivalent. Reflective sheeting must conform to 3M Diamond grade or approved equal.
9. Sidewalk clear width from edge of pole shall meet ADA requirements.
10. Sign mounting hardware must be Hawkins M2G–C2B–TP with theft–proof cap screw, or City approved equal.

REVIEWED BY _____ CITY ENGINEER

APPROVED BY _____ PUBLIC WORKS DIRECTOR — 1-1-14 DATE

The City of Sonoma or its officers or agents shall not be responsible for the accuracy or completeness of scanned copies of this sheet.

SCALE: NONE

STANDARD PLAN

115

City of Sonoma

PUBLIC WORKS DEPARTMENT

FRAME AND COVER ADJUSTMENT

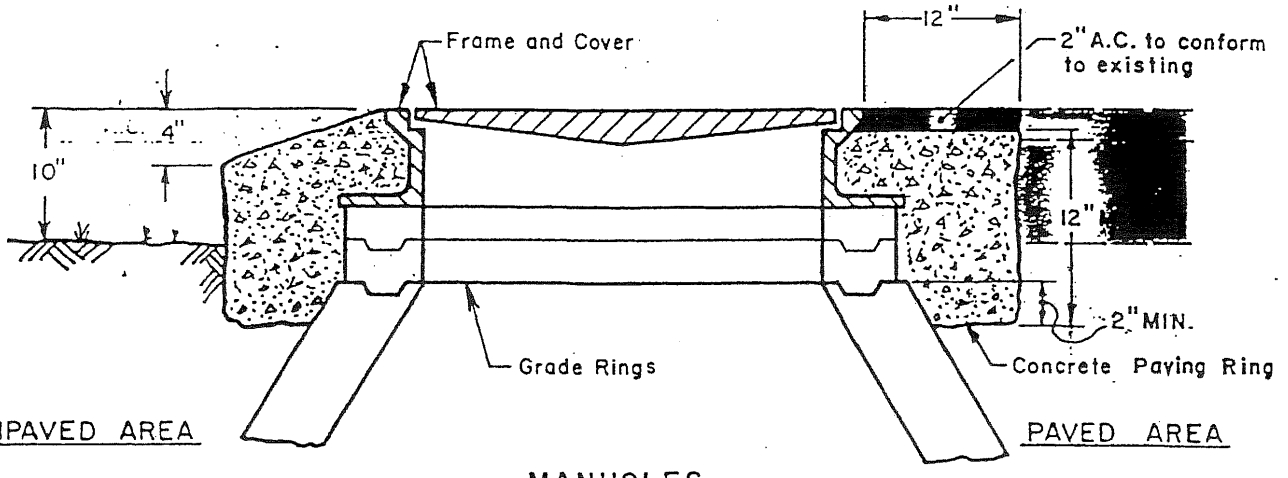

MANHOLES

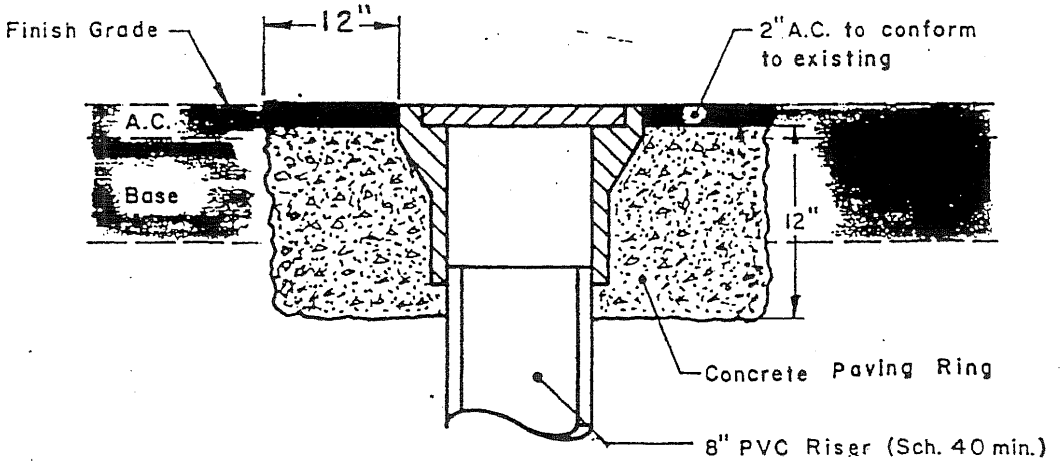

VALVES, CLEAN-OUTS, ETC.

NOTES:

1. In unpaved areas, concrete paving ring shall be as directed by the City Engineer.
2. Under new street construction or reconstruction, frames and covers shall be lowered below the subgrade processing depth and shall not be raised to grade until after paving.
3. The frame and cover shall not vary more than 1/8" from finish grade except that the rim of sanitary sewer manhole castings shall be installed 0.01' to 0.03' max. above finish pavement grade as required by the Sonoma County Sanitation Department.
4. Concrete shall be Class "B" per Caltrans specifications and shall be placed against a neat vertical excavation.
5. See Standard Plan 117 for adjustment of survey monument frame and cover.

APPROVED BY

Richard L. Lowland

PUBLIC WORKS DIRECTOR 5-11-76 DATE

NO.	REVISION DATE	BY
5	3-19-96	M.H.
2	6.25.76	H.H.
3	8-19-77	M.C.
4	3-25-85	P.W.

STANDARD PLAN 116

City of Sonoma

PUBLIC WORKS DEPARTMENT

SURVEY MONUMENT INSTALLATION

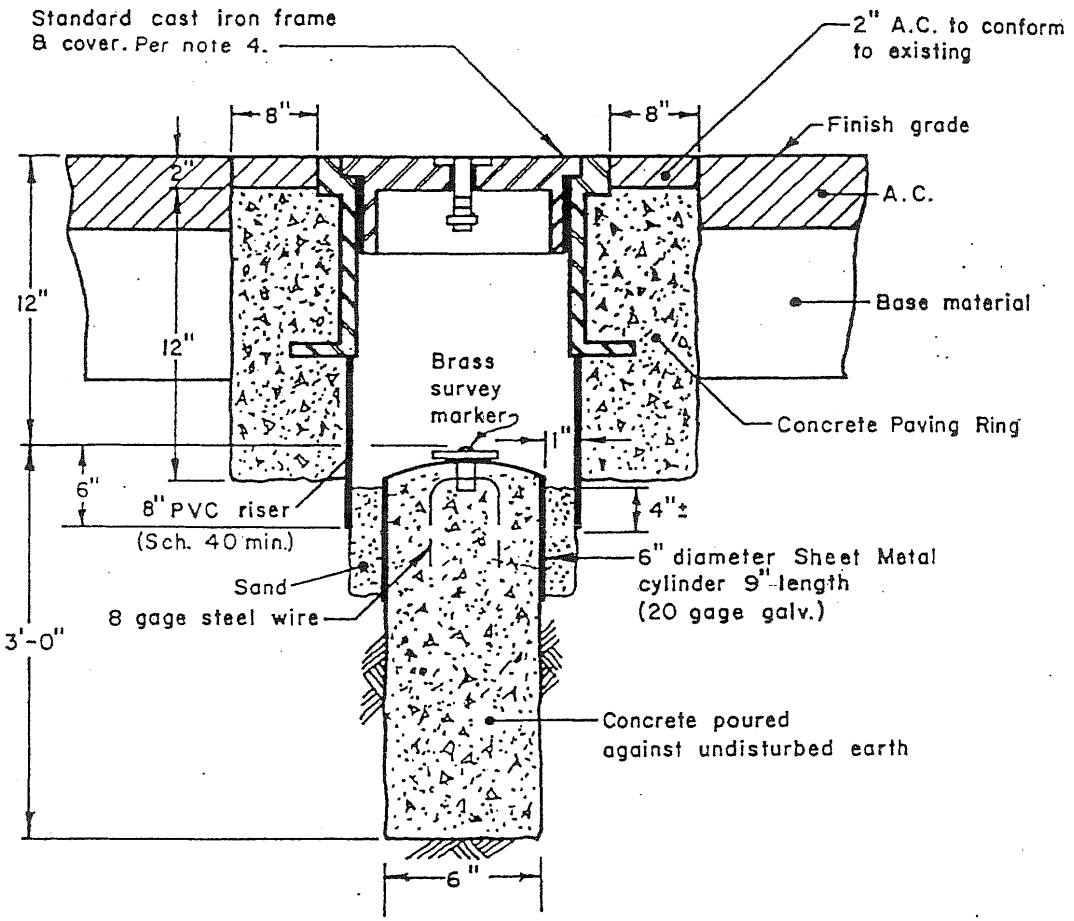

NOTES:

1. Frame and cover to be set to grade after final paving where monument is set in conjunction with new street construction or where grade adjustment must be made in conjunction with reconstruction or repaving an existing street.
2. The frame and cover shall not vary more than 1/8" from finish grade.
3. Concrete shall be Class "B" per Caltrans specifications.
4. Frame and cover shall be Santa Rosa Cast Products SR 51, Phoenix No. P-2001-A (P2001E), American Brass and Iron Foundary Model 5020-21 or approved equal.

APPROVED BY

Richard L. Rowland 5-10-76

PUBLIC WORKS DIRECTOR DATE

NO.	REVISION DATE	BY
1	11-12-76	H.H.
2	2-8-80	P.W.
3	3-4-86	P.W.
4	3-19-96	M.H.

STANDARD PLAN 117

City of Sonoma
PUBLIC WORKS DEPARTMENT

DEAD-END BARRICADE

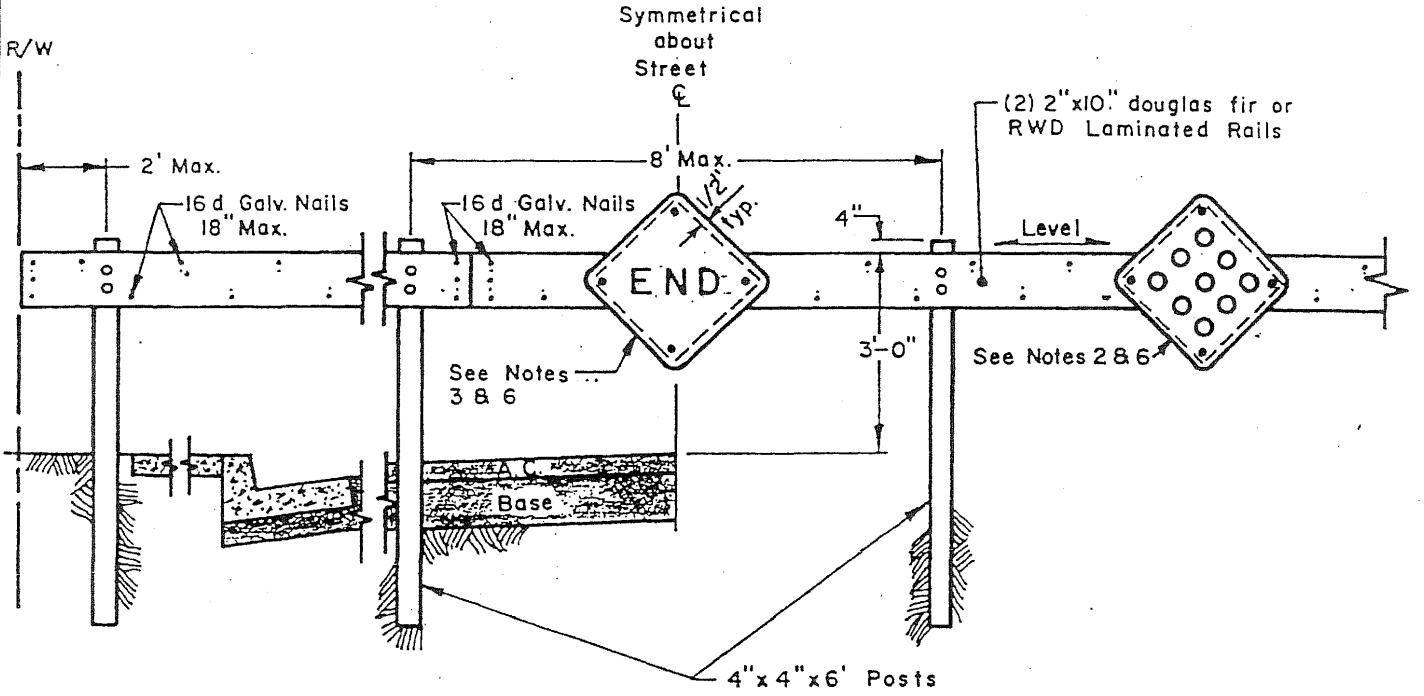

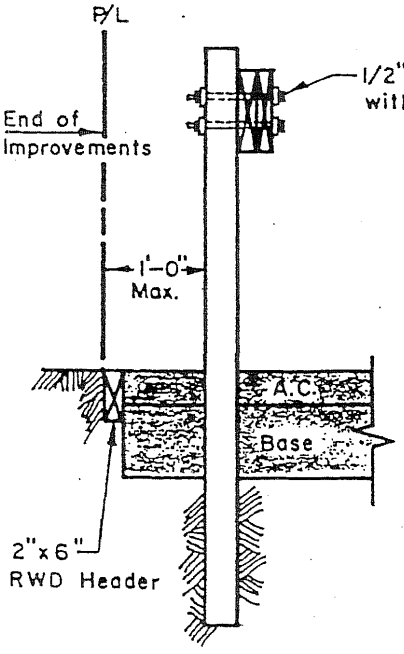

NOTES:

1. Dead-end barricade shall be installed after final paving and application of fog seal.
2. Install 18"x18" Type N-5 Markers (9 unit-red reflectors). Hawkins No. HW 321 or equal. Place one 8' each side of ℄.
3. Install 24"x24" W31 End Sign at street ℄. Hawkins HW370 or equal.
4. All post shall be redwood or treated douglas fir.
5. Entire barrier shall be painted with 3 coats of outside white paint.
6. Attach grade AB exterior plywood, 1/2" smaller than sign, to back of sign with 5/16" dia. x 3/4" galv. carriage bolts with cut washer at the top & bottom. Attach signs to railing with 5/16" dia. x 2 1/2" galv. lag screws with cut washer. Plywood shall be 1/2" thick.

APPROVED BY
Richard L. Rowland
PUBLIC WORKS DIRECTOR
DATE 11-28-78

NO.	REVISION DATE	BY
1	1-9-80	P.W.

STANDARD PLAN 118

City of Sonoma

PUBLIC WORKS DEPARTMENT

TREE IN PARKWAY STRIP

NTS

NOTES:

1. PLACE STAKES PLUMB & AS SHOWN IN STAKE LOCATION PLAN.
2. TREES SHALL NOT BE ROOT-BOUND. CAREFULLY SCARIFY ROOTBALL BEFORE PLANTING.
3. ELIMINATE WATER BASIN WHEN TREES ARE PLANTED IN LAWN.
4. USE WOOD STAKES FOR 15 GALLON TREES ONLY.
5. TREE PIT SHALL BE 3 TO 5 TIMES DIAMETER OF ROOT BALL IN CLAY SOILS OR HARDPAN CONDITIONS.
6. TREE PIT PERCOLATION TESTS SHALL BE PERFORMED IN CLAY SOILS OR HARDPAN CONDITIONS. INSTALL DRAIN SUMP IF 6" OF WATER DOES NOT DRAIN FROM PIT OVER A 12-HOUR PERIOD.
7. SEE ADDITIONAL GUIDELINES WHICH MAY APPLY TO THIS DETAIL.
8. PIPE TO BE 2' IN LENGTH. WRAP W/ FILTER FABRIC AND FILL W/ PEA GRAVEL OR DRAIN ROCK.

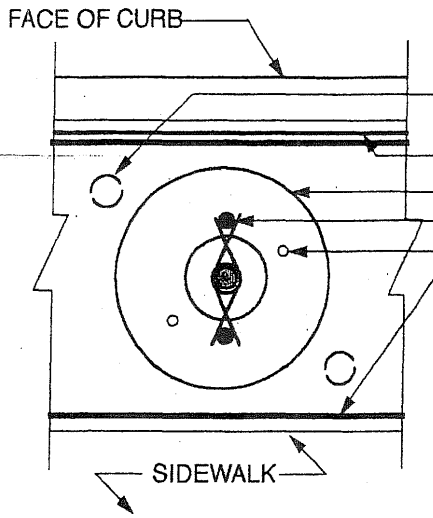

STAKE LOCATION PLAN

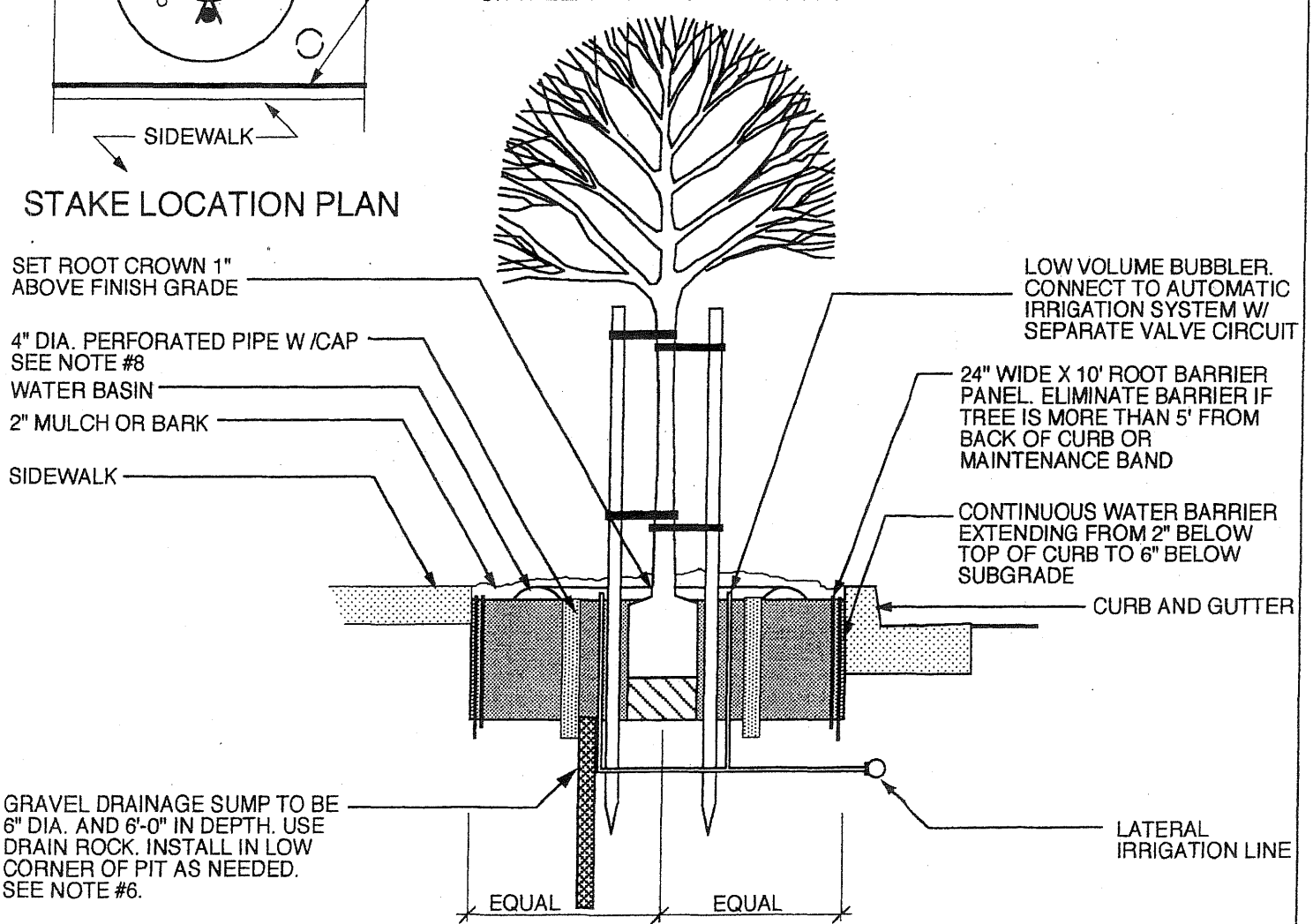

APPROVED BY

CITY ENGINEER — DATE 3-6-02

NO.	REVISION DATE	BY

3

City of Sonoma

PUBLIC WORKS DEPARTMENT

REMOVAL AND REPAIR OF EXISTING CURB, GUTTER, SIDEWALK AND DRIVEWAY APPROACHES

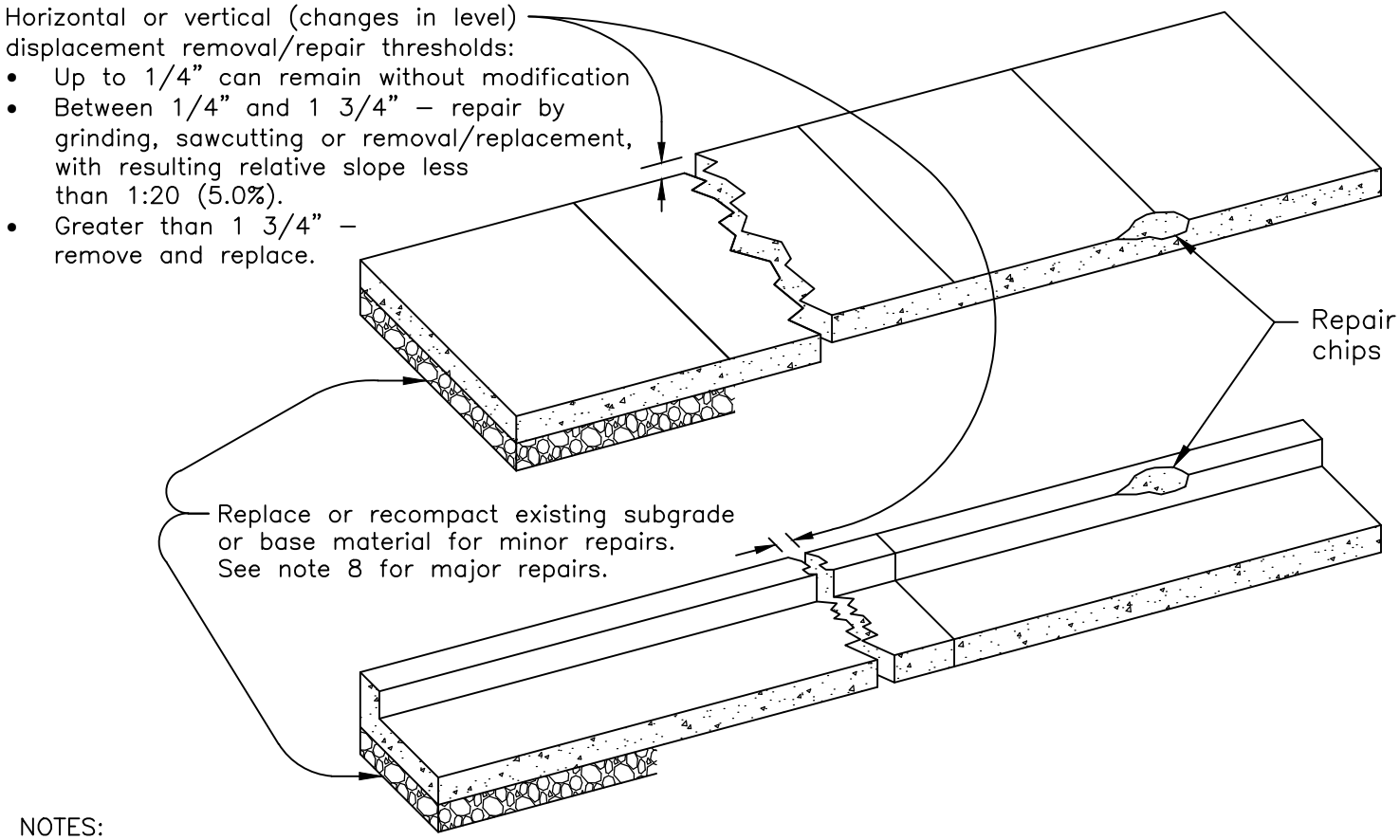

NOTES:

1. Curb, gutter and sidewalk removal shall be to the nearest expansion or weakened plane joint or saw at the nearest score line to a minimum depth of 2 1/2".
2. Curb, gutter and sidewalks which are defective from cracking or displacement per the above criteria or from excessive spalling or honeycombing as determined by the City Engineer shall be repaired by removing and replacing the defective portions.
3. Replacement concrete shall be formed and finished to the same standard required for new work (see specifications below). The edge of the existing pavement shall not be used as the gutter form unless otherwise approved by the City Engineer. The concrete shall be scored to match the existing score patterns.
4. Surface chips may be repaired by an epoxy method which will result in a hard surface, neat permanent repair. Surface texture and color shall match the adjacent concrete.
5. Driveway aprons shall be repaired by sawing out defective portion to nearest score line and replacing. The portion removed shall be rectangular with no dimension less than 4 feet.
6. Concrete specifications:
   Per City standard 108 or 110 for curb and gutter, per City standard 111 or 112 for residential or commercial driveways.
7. No concrete shall be placed without prior inspection by the City of Sonoma.
8. For major repairs (sections of sidewalk or curb and gutter over 12 feet in length or complete driveway aprons), subgrade and base material shall conform to standard plan 108 or 110.
9. For removal or curb and gutter, sawcut min. 1'–0" of adjacent A.C. pavement and replace per City standards.
10. All construction shall meet Americans with Disabilities Act (ADA) requirements.

REVIEWED BY _____ CITY ENGINEER

APPROVED BY _____ PUBLIC WORKS DIRECTOR — 1-1-14 DATE

The City of Sonoma or its officers or agents shall not be responsible for the accuracy or completeness of scanned copies of this sheet.

SCALE: NONE

STANDARD PLAN

121

City of Sonoma

PUBLIC WORKS DEPARTMENT

STREET NAME SIGN SPECIFICATIONS

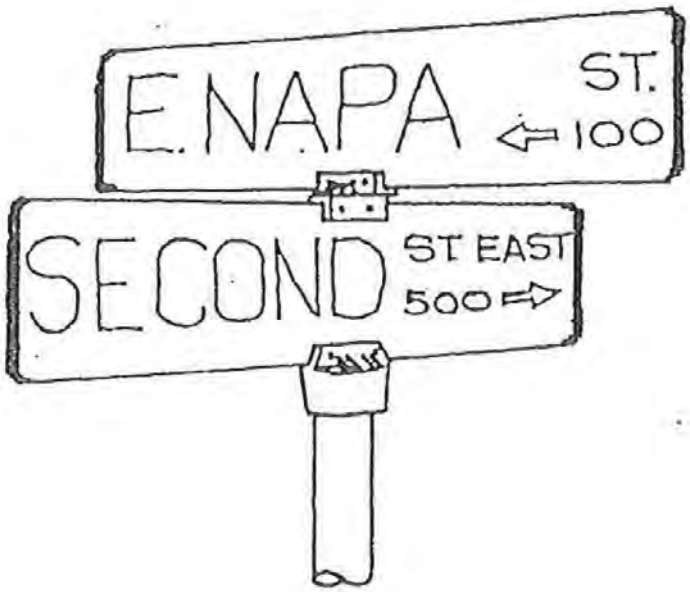

NOTES:

1. Street name sign and bracket assembly shall be as manufactured by:
   Hawkins – Hawkins Co.
   1255 Eastshore Hwy
   Berkeley, CA 94710
   Phone: (510)–525–4040

2. See Standard Plan 115 for installation detail.

3. See Standard Plan 606 or improvement plans for street name sign location.

SPECIFICATIONS

SIGN FACE

Color ——— Silver copy on brown background (3M Company #3270 silver and #2279 brown.

Copy ——— All copy shall be series C. 4" upper case copy for street names and 2" copy for suffix, block numbers and arrows.

Material ——— 3M Company "Scotchlite" engineering grade.

SIGN BLANK

Material ——— Blanks shall be aluminum 606IT6 alloy with an alodine surface.

Shape ——— Blank material shall be 0.125 inches thick.
Blank shall have 1/2 inch radius corners.

Size ——— Height: 6 inches
Length: 24 inches, 30 inches or 36 inches as determined by amount of copy.

SIGN BLANK

Post caps ——— Post caps shall be cast aluminum deeply grooved to securely hold sign on 2 inch galvanized pipe post without twisting. It shall be secured to the post with three (3) 5/16 inch allen–head set screws.

Sign to sign separators ——— Sign separators shall be die–cast aluminum and constructed so as to Separate two (2) signs, one above the other, at 90 degrees. Signs to be secured with four (4) allen–head set screws.

REVIEWED BY _____ CITY ENGINEER

APPROVED BY _____ PUBLIC WORKS DIRECTOR — 1-1-14 DATE

The City of Sonoma or its officers or agents shall not be responsible for the accuracy or completeness of scanned copies of this sheet.

SCALE: NONE

STANDARD PLAN

122

City of Sonoma

PUBLIC WORKS DEPARTMENT

MAILBOX LOCATION DETAILS

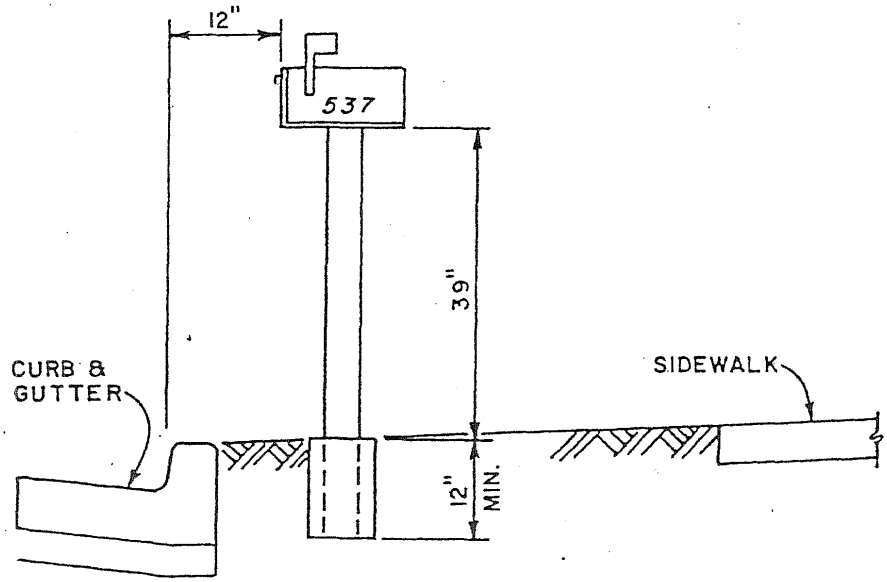

CASE "A"

(Planting Strip Behind Curb)

CASE "C"

(Sidewalk Adjacent To Curb - 6' or more in width)

For sidewalk 6' or more in width, locate mailbox behind curb. Location same as for Case "A".

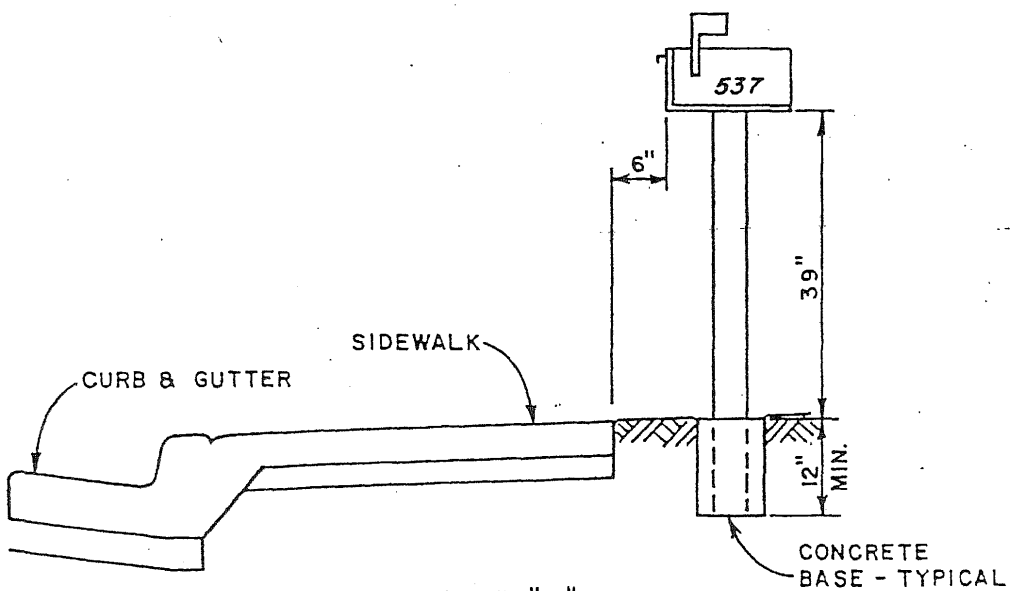

CASE "B"

(Sidewalk Adjacent To Curb)

NOTES:

1. All new mailboxes to be installed in the public right of way shall be installed in accordance with this Standard Drawing.
2. All mailboxes to be relocated due to street widening or reconstruction, sidewalk or driveway construction, etc., shall be reset in accordance with this Standard Drawing.
3. All conditions of the United States Postal Service not in conflict with this Standard Drawing shall also apply. It is encouraged that boxes be paired or in groups located at the side lot lines wherever practicable.

APPROVED BY

Richard L. Lowland

PUBLIC WORKS DIRECTOR

DATE 1-26-77

NO.	REVISION DATE	BY
1	3-10-81	P.W.

STANDARD PLAN 125

City of Sonoma
PUBLIC WORKS DEPARTMENT

DELINEATORS

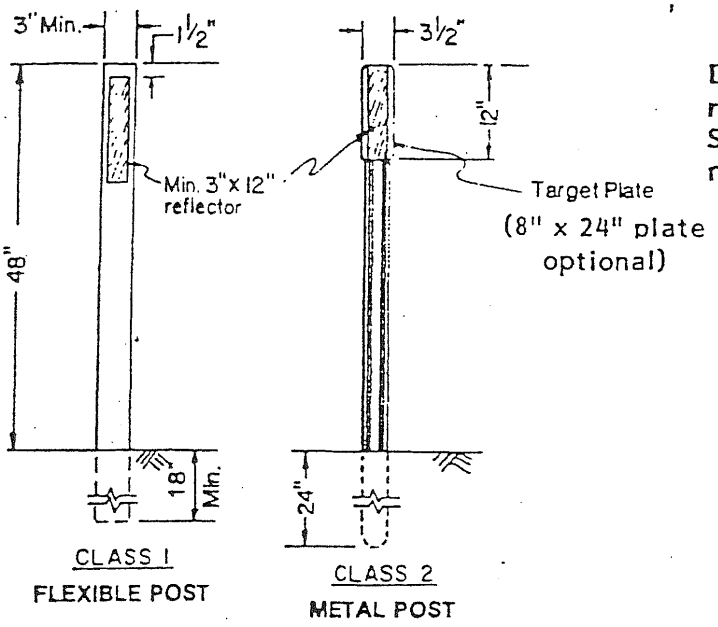

DELINEATORS

POLICY

Delineators are used to mark the edge of roadway including pavement transitions. See Standard Plan No. 127 for object markers used to mark obstructions.

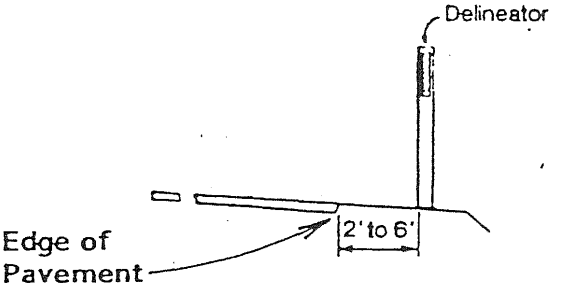

DELINEATOR POSITIONING

TYPE	REFLECTOR COLOR	
	FRONT	BACK
E	White	White
F	White	None
G	Yellow	None
I	Yellow	Yellow

DELINEATOR REFLECTORIZATION

NOTES:

1. The type of reflectorization and the class of post is designated as E-1, F-2, etc.
2. The reflector used on back of delineator may be 3" round or 3" square.
3. All materials shall meet Caltrans specifications and requirements unless otherwise approved by the City Engineer.

APPROVED BY
Richard L. Rowland
PUBLIC WORKS DIRECTOR
DATE 2-28-84

NO.	REVISION DATE	BY

STANDARD PLAN 126

City of Sonoma
PUBLIC WORKS DEPARTMENT

OBJECT MARKERS

TYPE K

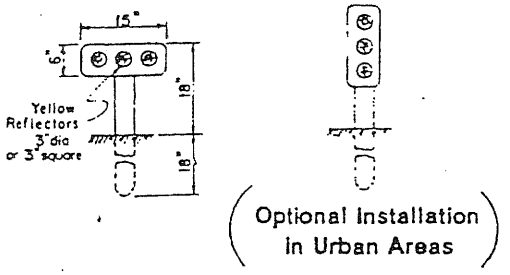

POLICY

Type K marker is used:

- In the far nose of median island openings
- Facing approaching traffic at the noses of islands forming right-turn lanes.
- In the nose of an island where traffic may proceed to either side.
- In the nose of exit ramps where there are curbs in the neutral area.

TYPE N

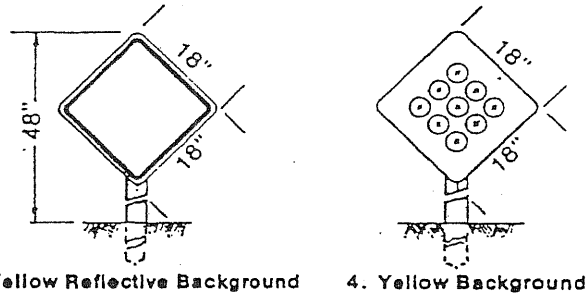

1. Yellow Reflective Background
2. Red Reflective Background
3. Orange Reflective Background
4. Yellow Background with 9-3" Yellow Reflectors
5. Red Background with 9-3" Red Reflectors

- Yellow Type N marker may be used below and on the same post with the W56 or W57 arrow signs to warn of an abrupt turn. Orange Type N marker is used in construction zones.
- Red Type N marker is normally mounted below and on the same post with the W31 END sign to mark the end of a street or highway.

TYPE L

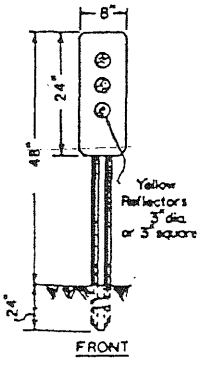

TYPE P

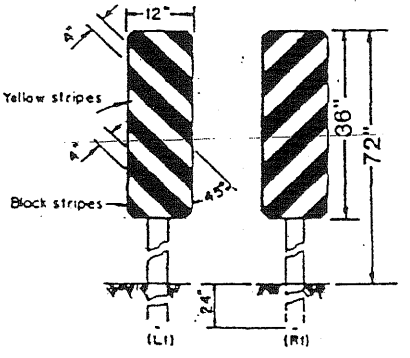

- Type L marker is used to mark obstructions adjacent to the roadbed (outside of paved shoulder).
- Type P marker is used to mark an obstruction within the roadbed (between edges of paved shoulders). Type P marker with orange and white stripes is used in construction zones.

NOTE:

1. All materials shall meet Caltrans specifications and requirements unless otherwise approved by the City Engineer.

APPROVED BY Richard L. Rowland
PUBLIC WORKS DIRECTOR 3-2-84 DATE

NO.	REVISION DATE	BY

STANDARD PLAN 127

City of Sonoma
PUBLIC WORKS DEPARTMENT

VERTICAL THRUST BLOCK REQUIREMENTS

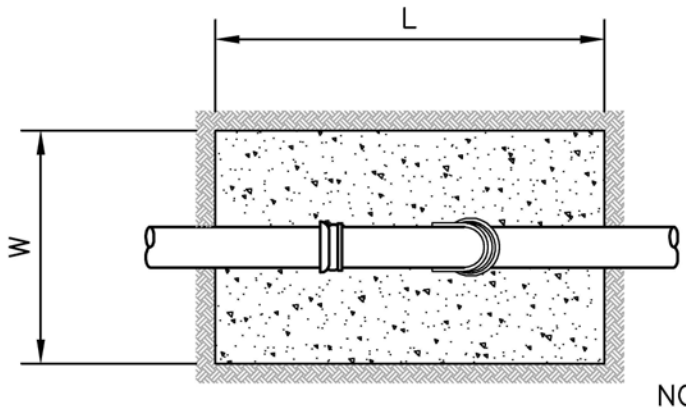

NOTES:
1. Concrete shall be Class "B" per Caltrans specifications and shall be poured against undisturbed earth.
2. This type of vertical offset shall be used only where there is a conflict in grade of underground facilities.

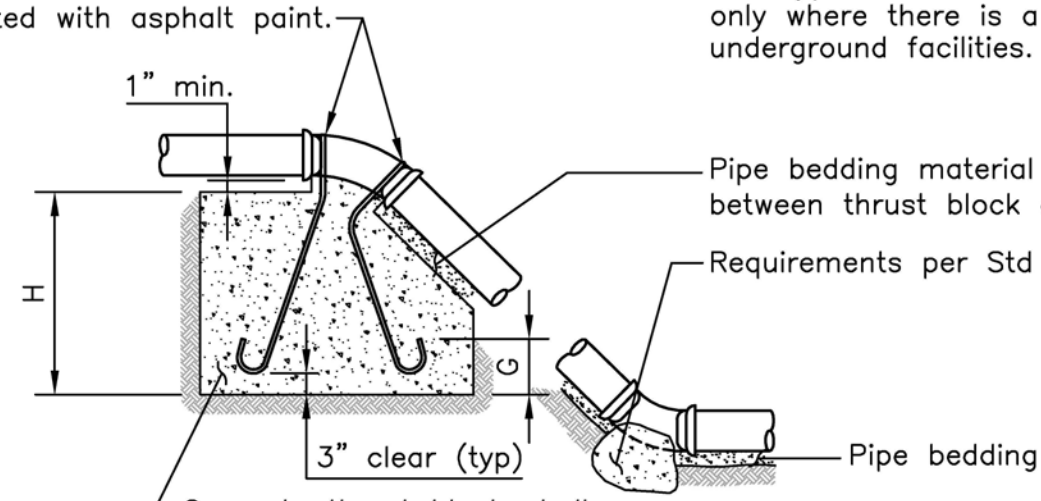

THRUST BLOCK DIMENSIONS												
Pipe Size	11½° Bend				22½° Bend				45° Bend			
	L	W	H	G	L	W	H	G	L	W	H	G
6"	2'–0"	2'–0"	1'–0"	9"	2'–0"	2'–0"	2'–0"	1'–0"	3'–0"	2'–0"	2'–0"	6"
8"	2'–0"	2'–0"	1'–0"	9"	3'–0"	2'–0"	2'–0"	1'–0"	4'–6"	2'–0"	3'–0"	6"
10"	3'–0"	2'–0"	2'–0"	1'–8"	4'–0"	2'–0"	2'–0"	1'–0"	6'–0"	2'–0"	3'–8"	8"
12"	3'–0"	2'–0"	2'–0"	1'–8"	6'–0"	2'–0"	2'–0"	1'–0"	7'–0"	2'–0"	4'–0"	6"

REVIEWED BY Toni Bertolero
CITY ENGINEER
APPROVED BY
PUBLIC WORKS DIRECTOR
10-7-09
DATE

NO.	REVISION DATE	BY

STANDARD PLAN

253

City of Sonoma

PUBLIC WORKS DEPARTMENT

HORIZONTAL THRUST BLOCK INSTALLATION

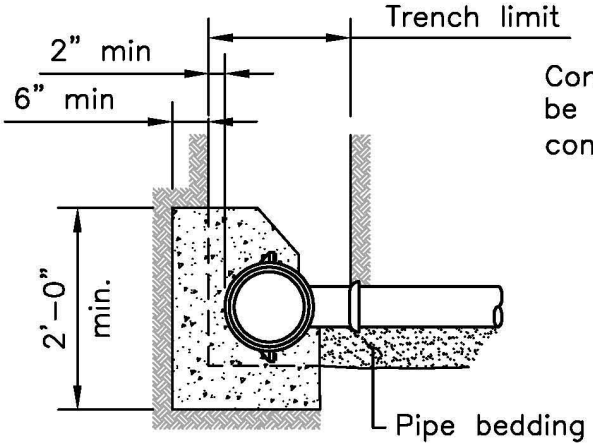

TYPICAL SECTION

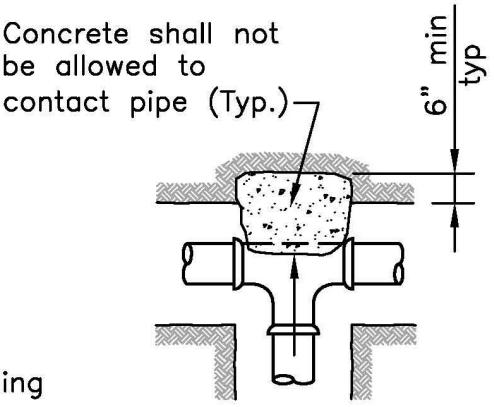

TEE

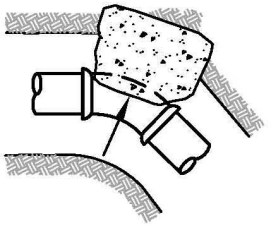

$11\frac{1}{4}°$, $22\frac{1}{2}°$, 45°, 90°
HORIZONTAL BEND

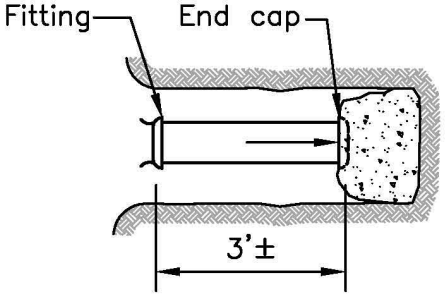

DEAD END

MIN. REQ'D BEARING AREA IN SQ. FT. PER 100 P.S.I. TEST PRESSURE*					
PIPE SIZE	SOIL BEARING CAPACITY(PSF)	TEES & DEAD ENDS	90° BENDS	45° BENDS	22-1/2°, 11-1/4° BENDS
6"	1000	4	6	3	2
	2000	2	3	2	1
8"	1000	7	10	5	3
	2000	4	5	3	2
10",12"	1000	16	22	12	6
	2000	8	11	6	3

* MULTIPLY NO. IN TABLE BY TEST PRESSURE & DIVIDE BY 100
For pipes greater than 12", Design Engineer must submit calculations to size concrete thrust blocks.

NOTES:

1. Thrust blocks for conditions not covered on this drawing shall be satisfactory to the Civil Engineer. The Contractor shall construct thrust blocks as necessary to provide support while connecting to existing facilities.
2. For purposes of determining thrust block requirements, tees shall include tapping sleeves and flanged nipples or other welded connections over 3" in diameter to main line pipe.
3. Thrust blocks shall not interfere with pipe joints, bolts, nuts, etc.
4. Arrows (⟶) indicate direction of thrust.
5. Concrete shall be Class "B" per Caltrans specifications for all thrust blocks and fitting supports and shall be poured against undisturbed earth.
6. All fittings shall be supported in concrete as shown in Typical Section.
7. The design Engineer shall furnish blocking requirements where design criteria differ from above.
8. For other thrust blocking requirements refer to:
   STD Plan 277 for Valves, STD Plan 257 for Fire Hydrants, STD Plan 261 for Blow-offs, STD Plan 253 for Vertical Bends
9. Valves and fittings shall be temporarily supported prior to construction of concrete supports and thrust blocks in a manner satisfactory to the City Engineer.
10. Wood blocking shall be redwood or pressure treated lumber.
11. Pressure test shall not be conducted against a closed valve.
12. Pressure test at 150 PSI for 4 hours, or 200 PSI for 2 hours.

REVIEWED BY Toni Bertolero
CITY ENGINEER

APPROVED BY
PUBLIC WORKS DIRECTOR — DATE 10-7-09

NO.	REVISION DATE	BY

STANDARD PLAN

254

City of Sonoma

PUBLIC WORKS DEPARTMENT

FIRE HYDRANT INSTALLATION

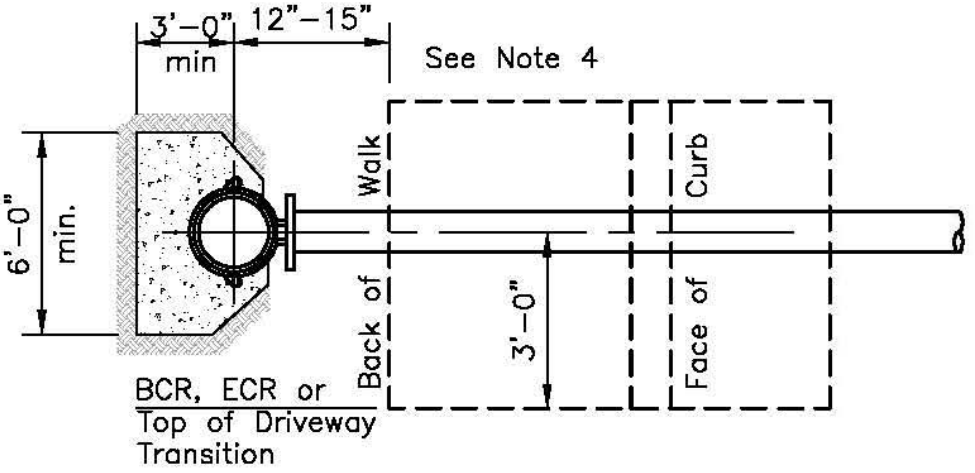

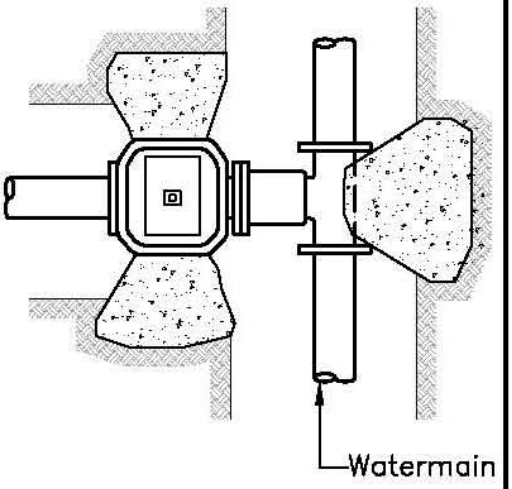

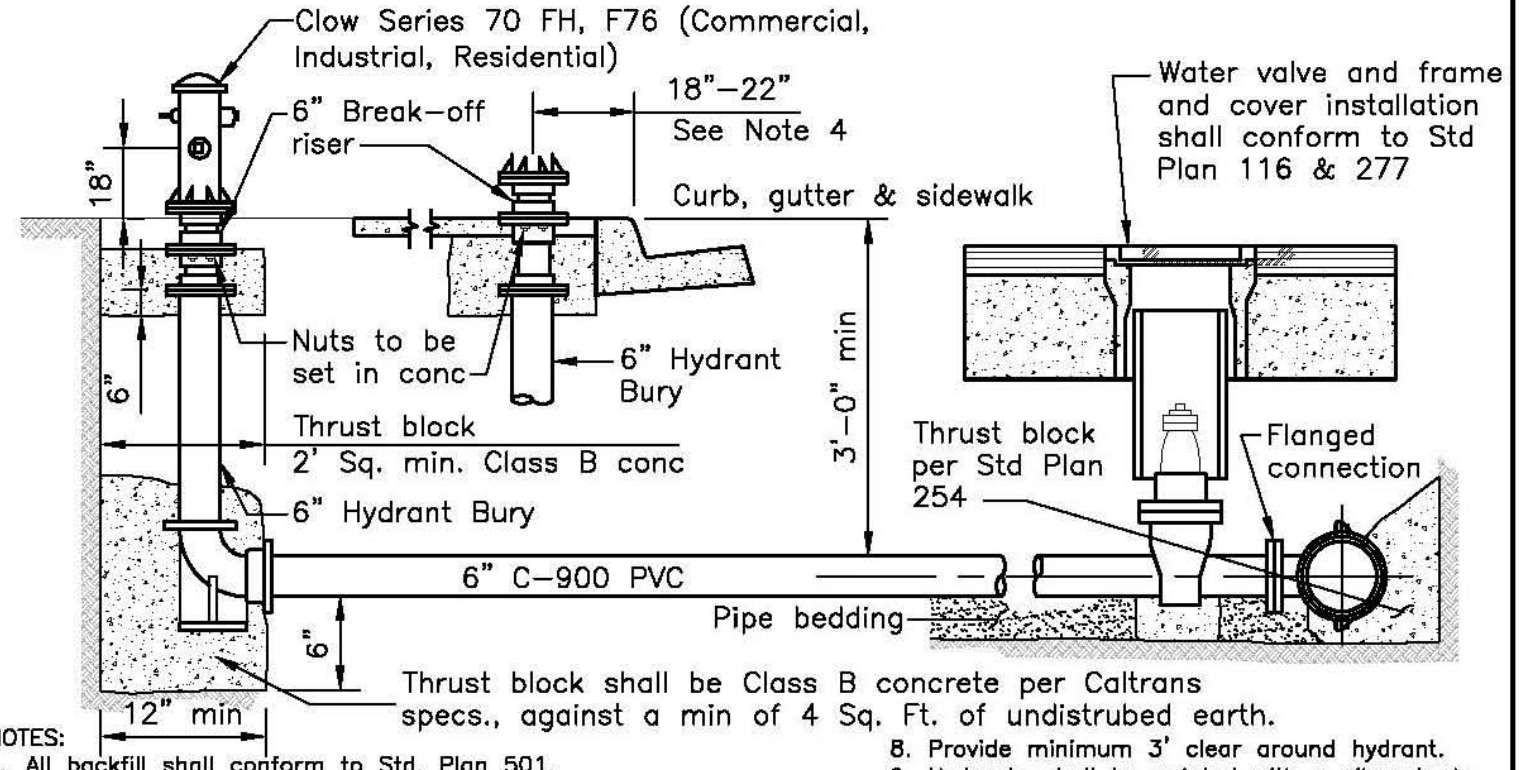

NOTES:

1. All backfill shall conform to Std. Plan 501.
2. Flow test hydrant under City supervision.
3. Hydrant shall be set plumb with $4\frac{1}{2}$" outlet oriented toward street.
4. For sidewalks 5' or more in width and in parkways the hydrant shall be located 18" to 22" from face of curb.
5. Bolts and nuts for flanged connections shall be stainless steel.
6. Where fire hydrant is not to be installed with hydrant assembly a blind flange shall be used to cap off break-off riser.
7. Restrained joints are required for all new construction from water main to hydrant. Thrust blocks are required only where existing hydrants are being modified and restrained joints are not used.
8. Provide minimum 3' clear around hydrant.
9. Hydrants shall be painted with a silver body. Based on flow test results, outlet caps shall be painted according to the following table:
   - Blue = 1500 GPM or more
   - Green = 1000-1499 GPM
   - Orange = 500-999 GPM
   - Red = Below 500 GPM
10. Bollards are required in areas that are subject to vehicle impact or as required by City Engineer.
11. No private hydrants shall be acceptable unless approved by the City Engineer.

REVIEWED BY Toni Bertolero
CITY ENGINEER

APPROVED BY
PUBLIC WORKS DIRECTOR

10-7-09
DATE

NO.	REVISION DATE	BY

STANDARD PLAN

257

City of Sonoma

PUBLIC WORKS DEPARTMENT

BLOW-OFF VALVE INSTALLATION

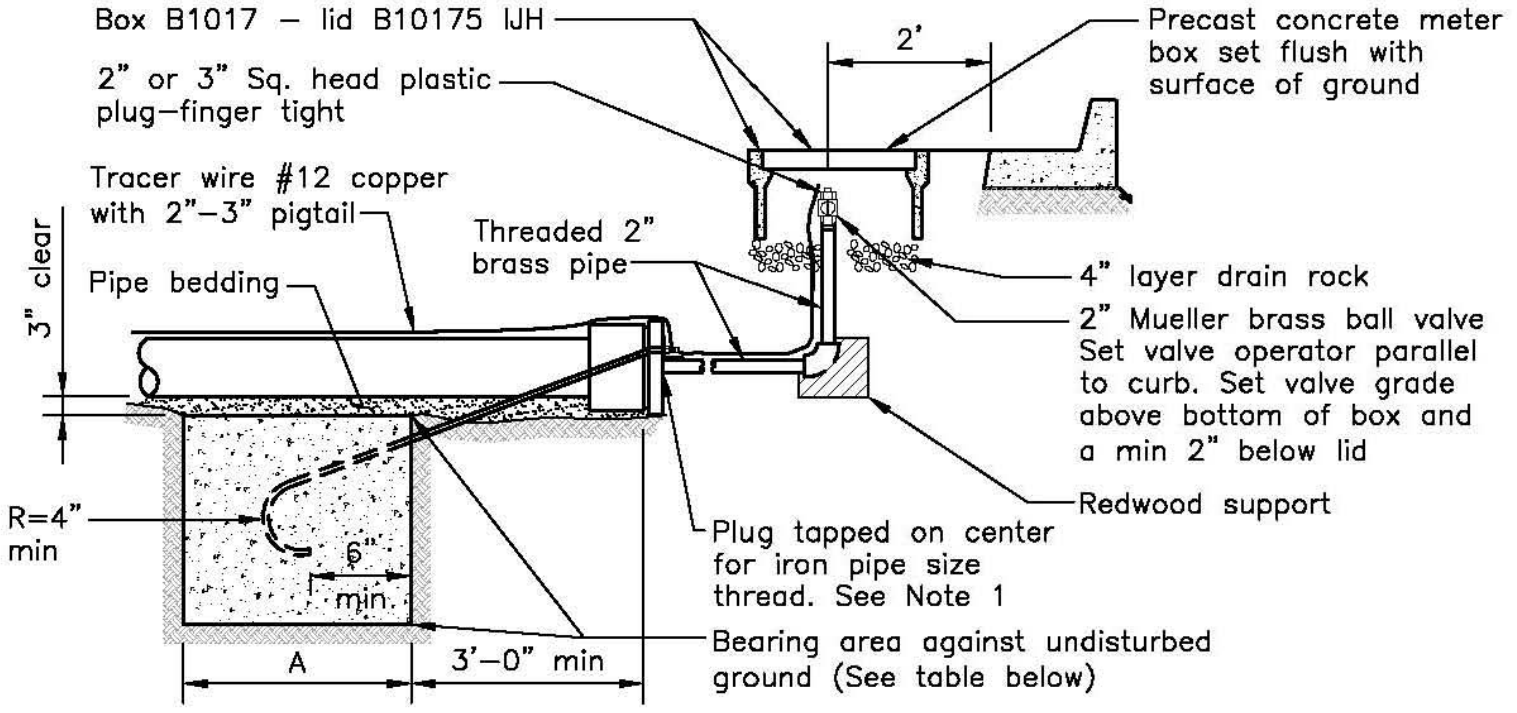

ELEVATION

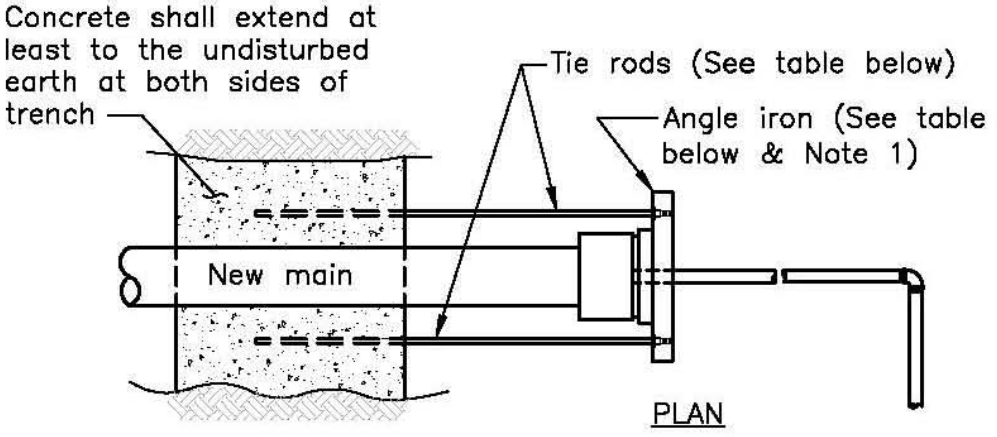

PLAN

NOTES:

1. For 6" & 8" mains, M.J. plugs or caps with dilly lugs and 2" center tap may be used in lieu of angle iron. Install angle iron off–center to accomodate center tap.
2. Traffic box – Christy B1324 box cover – B–1324–61JH.

MINIMUM DIMENSIONS					
Pipe Size	Tie Rods	Angle Iron	Bearing Area	A	Size B.O.
6"	$\frac{5}{8}$"	3"x3"x$\frac{1}{4}$"	* 4 Sq. Ft.	2'	2"
8"	$\frac{3}{4}$"	3$\frac{1}{2}$"x3"x$\frac{1}{4}$"	* 7 Sq. Ft.	3'	2"
10"	1"	3"x2"x$\frac{1}{2}$"	11 Sq. Ft.	3'	3"
12"	1$\frac{1}{8}$"	4"x3"x$\frac{1}{2}$"	15 Sq. Ft.	3'	3"
Over 12"	By the design engineer				3"

* (see note 1)

REVIEWED BY Toni Bertolero
CITY ENGINEER

APPROVED BY
PUBLIC WORKS DIRECTOR

10-7-09
DATE

NO.	REVISION DATE	BY

STANDARD PLAN

261

City of Sonoma

PUBLIC WORKS DEPARTMENT

1" WATER SERVICE

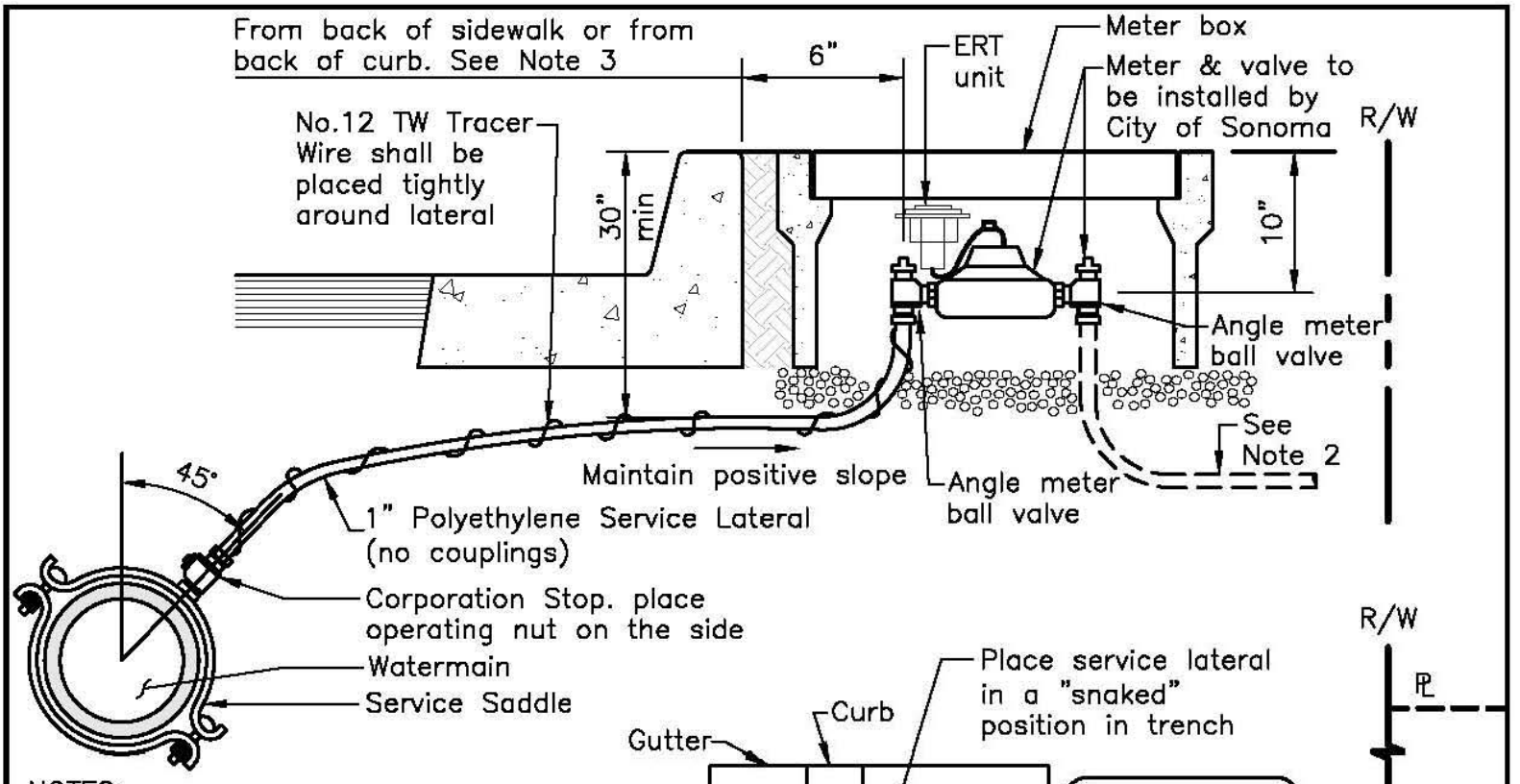

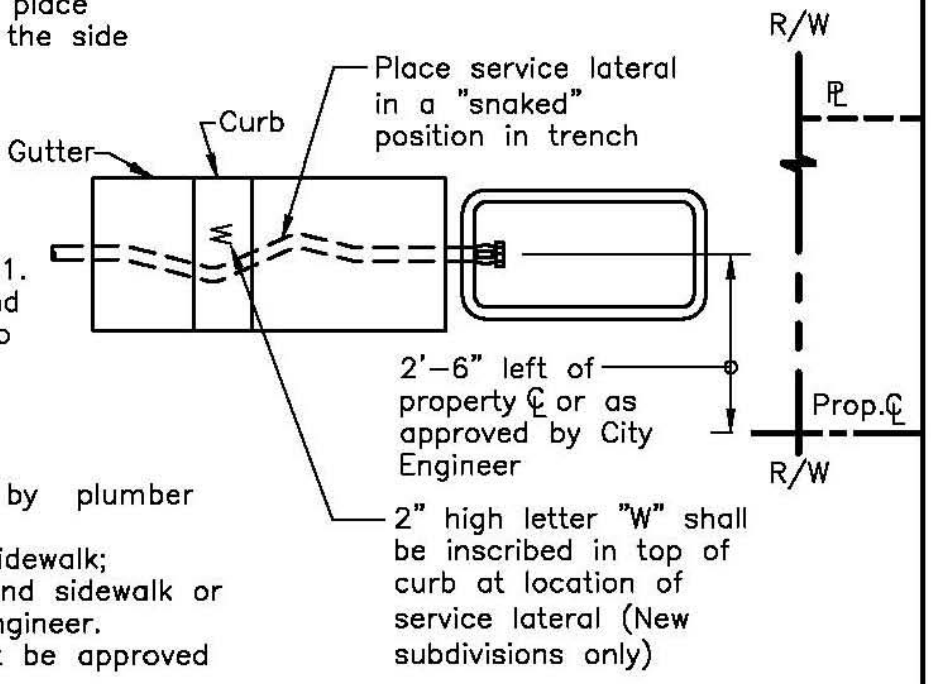

NOTES:

1. Structural section and trench section backfill shall conform to STD Plan 501. Pipe bedding shall have minimum sand equivalent of 30 and shall conform to the following percent passing grading:

3/4"	3/8"	#4	#200
100%	95%–100%	30%–80%	0%–15%

2. House connection shall be connected by plumber after meter installation by City.
3. Meter location shown is at back of sidewalk; however, meter shall be installed behind sidewalk or at curb as determined by the City Engineer.
4. Substitutions for listed materials must be approved by City Engineer.
5. Use stainless steel inserts with all compression type fittings.

SERVICE SIZE	SERVICE SADDLE		CORPORATION STOP	SERVICE LATERAL	ANGLE METER BALL VALVE	METER BOX	METER BOX LID
	C–900 PVC	ACP					
1" CTS	Mueller BR2B or BR2S or approved equal	Mueller BR2B or BR2S or approved equal	Mueller B–25008 or approved equal	Polyethylene ASTM D 2737 Class 200	Mueller B–24258 or approved equal	Christy B–16	Christy B–16D or B–16C in traffic areas

REVIEWED BY Toni Bertolero
CITY ENGINEER

APPROVED BY
PUBLIC WORKS DIRECTOR 10-7-09 DATE

NO.	REVISION DATE	BY

STANDARD PLAN

263

City of Sonoma

PUBLIC WORKS DEPARTMENT

1 1/2" WATER SERVICE

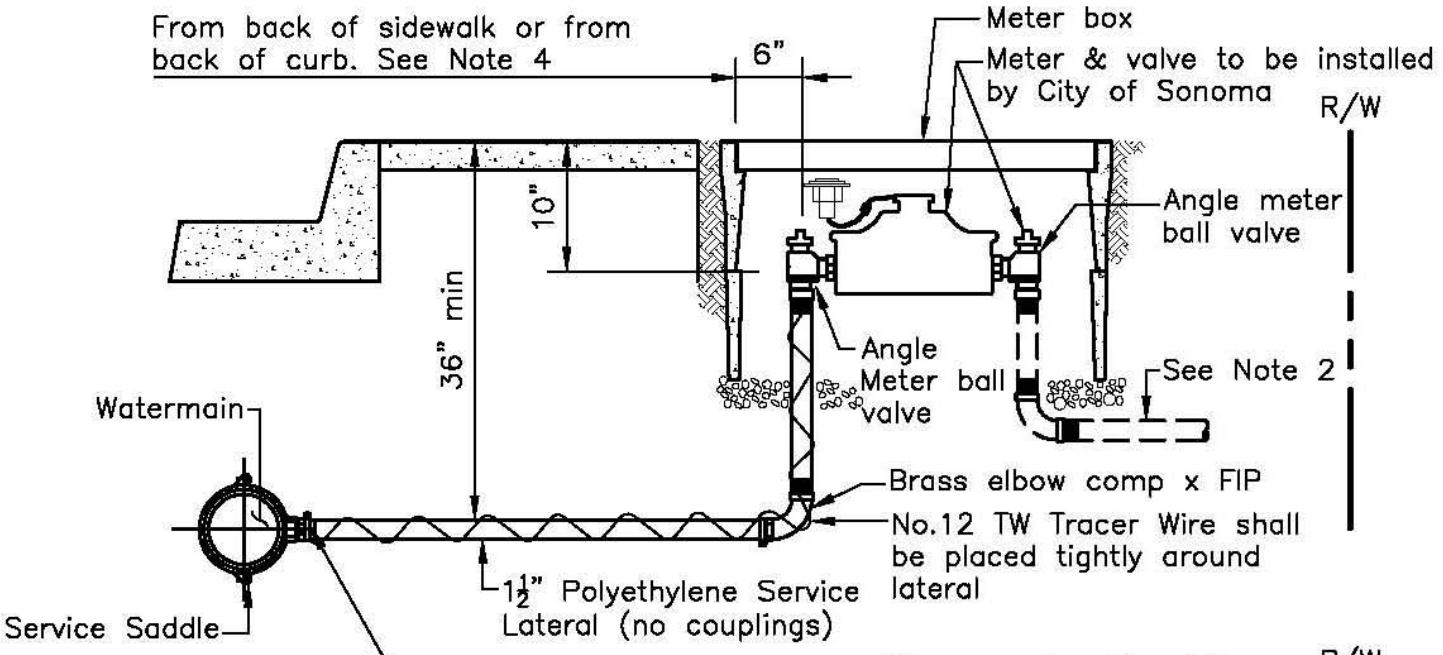

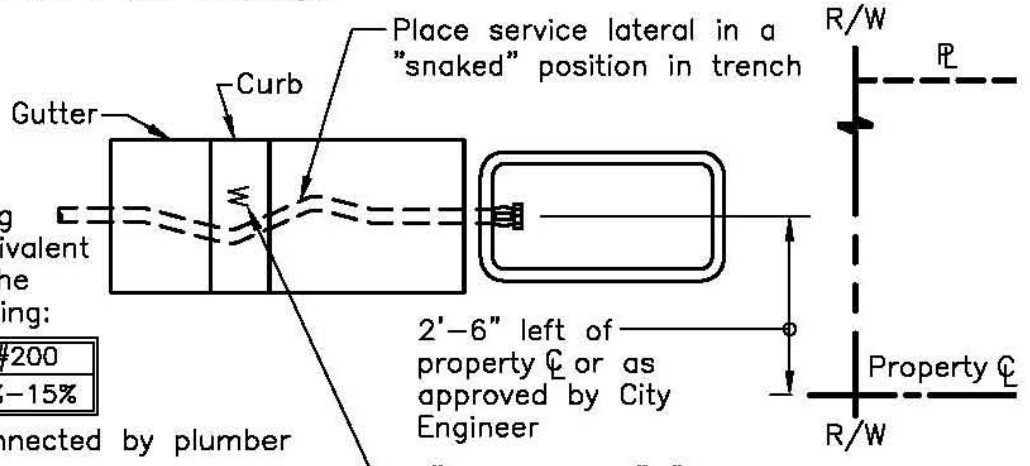

NOTES:

1. Structural section and trench section backfill shall conform to STD Plan 501. Pipe bedding shall have minimum sand equivalent of 30 and shall conform to the following percent passing grading:

3/4"	3/8"	#4	#200
100%	95%–100%	30%–80%	0%–15%

2. House connection shall be connected by plumber after meter installation by City.
3. Substitutions for listed materials must be approved by City Engineer.
4. Meter location shown is at back of sidewalk; however, meter shall be installed behind sidewalk or at curb as determined by the City Engineer.
5. Use stainless steel inserts with all compression type fittings.

** = Or use approved equal.

SERVICE SIZE	SERVICE SADDLE		CORPORATION STOP	SERVICE LATERAL	ELBOW	ANGLE METER BALL VALVE	METER BOX	METER BOX LID
	C–900 PVC	ACP						
1 1/2" CTS	Mueller BR2B or BR2S **	Mueller BR2B or BR2S **	Mueller B–25008 **	Polyethylene ASTM D 2737 Class 200	Mueller H 15533 **	Mueller B–24286 **	Christy B–36	Christy B–36D or B–36 61G in traffic areas

REVIEWED BY Toni Bertolero
CITY ENGINEER

APPROVED BY
PUBLIC WORKS DIRECTOR

10-7-09
DATE

NO.	REVISION DATE	BY

STANDARD PLAN

265-A

City of Sonoma

PUBLIC WORKS DEPARTMENT

2" COMMERCIAL WATER SERVICE

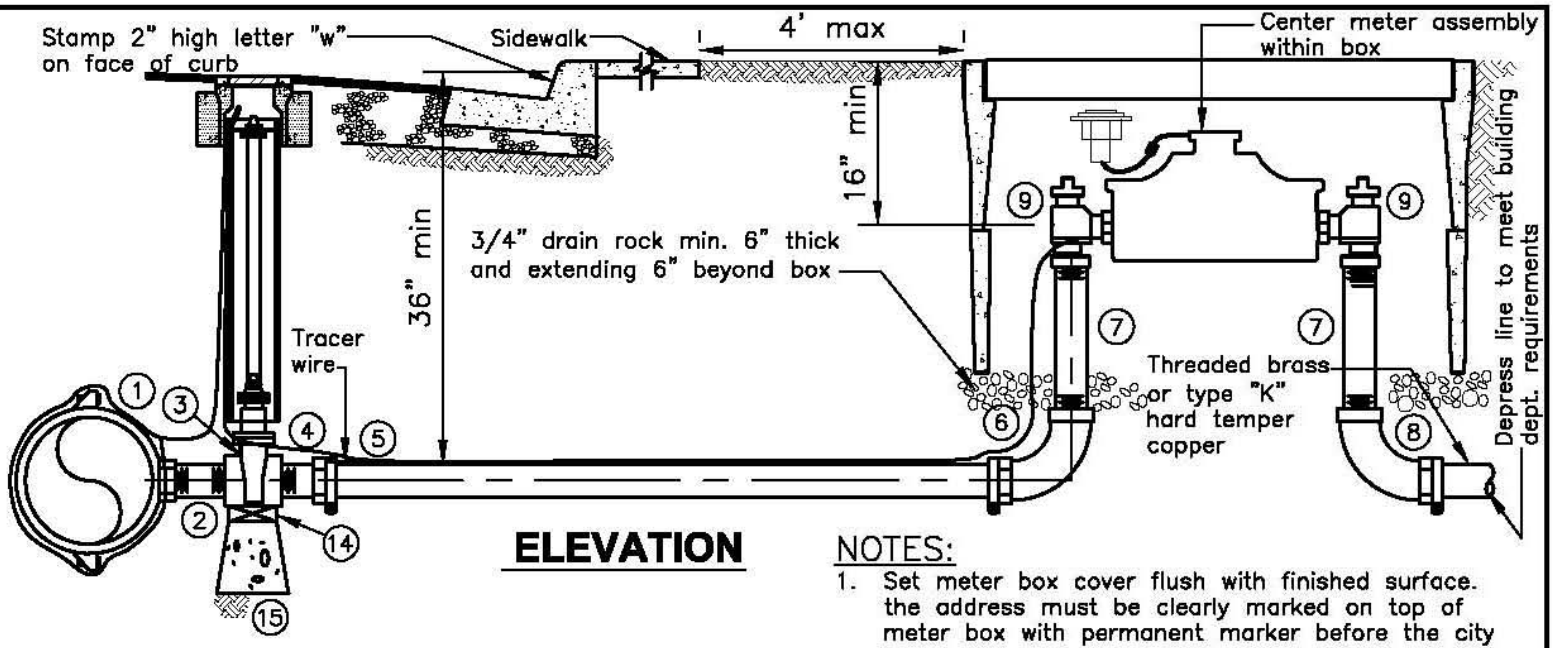

ELEVATION

NOTES:

1. Set meter box cover flush with finished surface. the address must be clearly marked on top of meter box with permanent marker before the city will activate service.
2. Service connection to be installed by plumber after meter installation by City.
3. Refer to city standard 277 for gate valve installation details.
4. Refer to city water standards for construction standards, specifications and engineer's list of approved materials.
5. Pipe openings in meter box shall be cut – do not use hammer. prior to backfilling, pipe openings and box joints shall be grouted.
6. Connect service tracer wire to the tracer wire on the main. in absence of main tracer wire, wrap service tracer wire around the main. run continuous from main to meter box with loops into each valve box.
7. No fencing shall be installed between street and meter box.
8. All compression fittings shall have stainless steel inserts.
9. Restrained joints are required for all new construction from water main to 90° elbow on the down stream side of the meter.
10. Structural section and trench section backfill shall conform to STD Plan 501. Pipe bedding shall have minimum sand equivalent of 30 and shall conform to the following percent passing grading:

3/4"	3/8"	#4	#200
100%	95%–100%	30%–80%	0%–15%

** = Or use approved equal.

NO.	ITEM DESCRIPTION	QTY.
1	Service saddle	1
2	2" x 4" brass nipple, threaded	3
3	2" resilient wedge gate valve, threaded (see std 277)	2
4	2" brass adapter, mip x compression	1
5	2" polyethylene tubing	1
6	2" brass ell, comp. x fip	1
7	2" brass pipe, threaded (length as necessary)	2
8	2" brass street ell. (standard ell for no bypass)	1
9	Angle ball valve (set min. 2" from box at each end)	2
10	2" compound meter	1
11	2" brass pipe, thread x pe (24" min. length)	1
12	Redwood blocking (as needed)	2
13	Concrete pier block	2

SERVICE SIZE	SERVICE SADDLE		GATE VALVE	SERVICE LATERAL	ELBOW	CURB STOP	METER BOX	METER BOX LID
	C–900 PVC	ACP						
2" CTS	Mueller BR2B or BR2S **	Mueller BR2B or BR2S **	2" Mueller A–2360–8 **	Polyethylene ASTM D 2737 Class 200	Mueller H 15533 **	Mueller B–24286 **	Christy B–36	Christy B–36 or B–36–61G in traffic areas

REVIEWED BY Toni Bertolero
CITY ENGINEER

APPROVED BY
PUBLIC WORKS DIRECTOR 10-7-09
DATE

NO.	REVISION DATE	BY

STANDARD PLAN

265-B

City of Sonoma

PUBLIC WORKS DEPARTMENT

WATER SERVICE 3" AND LARGER

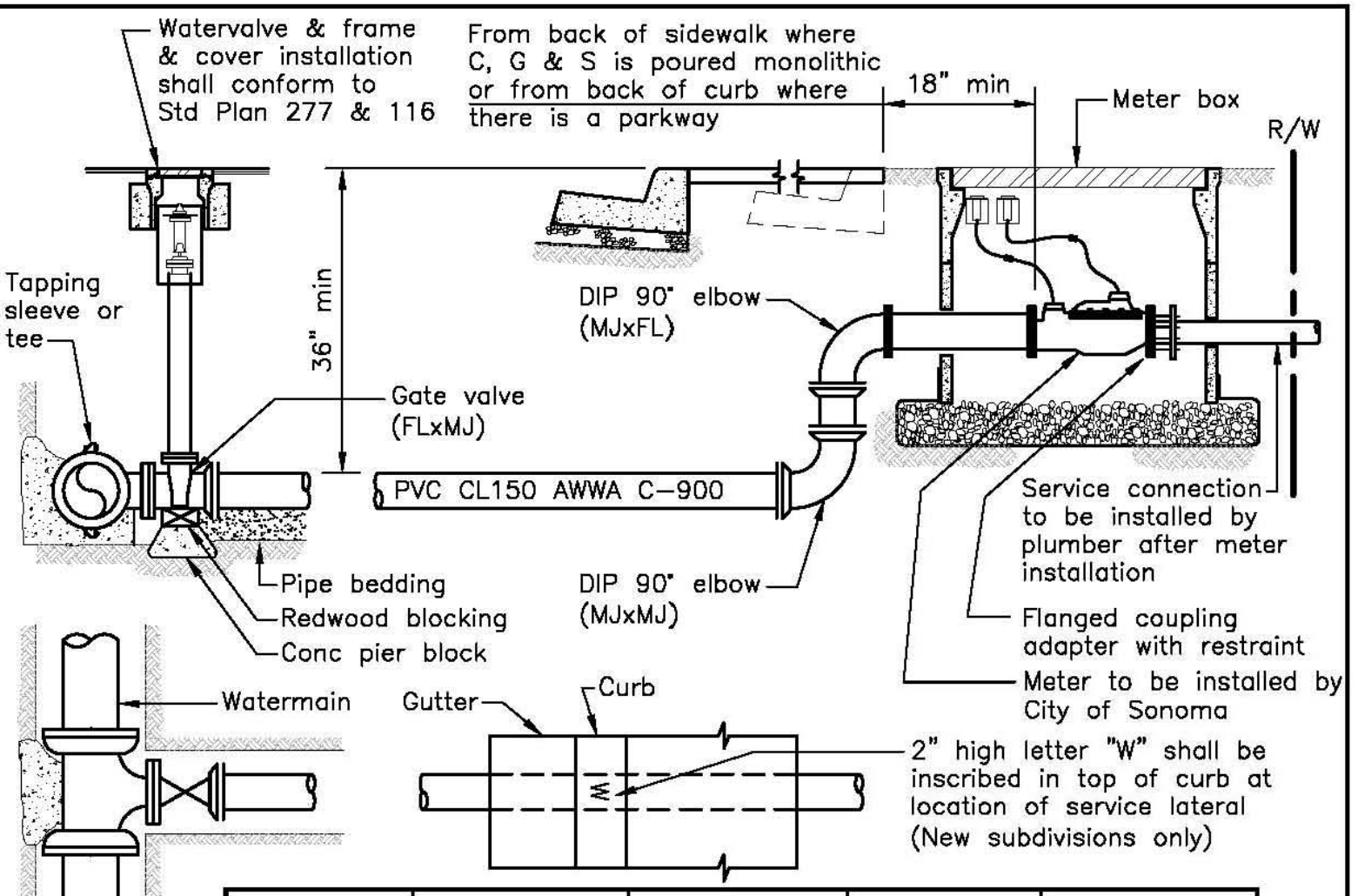

Service Size	Valve	Adapter	Meter Box	Meter Box Lid
3"	See Std. Plan 277	916 Smith Blair	B40 Christy	B40M Christy
4"				
6"				

NOTES:

1. Bolts and nuts for flanged connections shall be stainless steel.
2. Backfill shall conform to Std. Plan 501.
3. Valve installation and thrust blocking shall conform to Std. Plans 277 & 254, respectively.
4. Install 4"valve and pipe and a 3x4 flanged reducer for a 3" water service.
5. Restrained joints are required for all new construction from water main to FCA on downstream side of meter. Thrust blocks shown are only required where existing services are being modified and restrained joints are not used.
6. Structural section and trench section backfill shall conform to STD Plan 501. Pipe bedding shall have minimum sand equivalent of 30 and shall conform to the following percent passing grading:

3/4"	3/8"	#4	#200
100%	95%-100%	30%-80%	0%-15%

REVIEWED BY Toni Bertolero
CITY ENGINEER

APPROVED BY
PUBLIC WORKS DIRECTOR

10-7-09
DATE

NO.	REVISION DATE	BY

STANDARD PLAN

266

City of Sonoma
PUBLIC WORKS DEPARTMENT

SEWER ENCASEMENT DETAIL

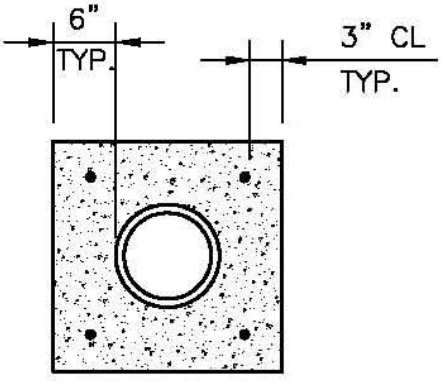

NOTES:

1. Concrete encasement is applicable where water main crosses below sewer main or where specified by the city engineer.
2. Concrete encasement shall extend 5' minimum each way from water main crossing unless a lesser length is specified by the City Engineer in the field.
3. Concrete shall be Class "B" per Caltrans specifications.
4. All crossings of sewer and water mains shall conform to California Department of Public Health separation guidelines.

REVIEWED BY Toni Bertolero
CITY ENGINEER

APPROVED BY
PUBLIC WORKS DIRECTOR

10-7-09
DATE

NO.	REVISION DATE	BY

STANDARD PLAN

272

City of Sonoma
PUBLIC WORKS DEPARTMENT

TYPICAL BACKFLOW PREVENTION ASSEMBLY INSTALLATION (D.C.V. OR R.P.)

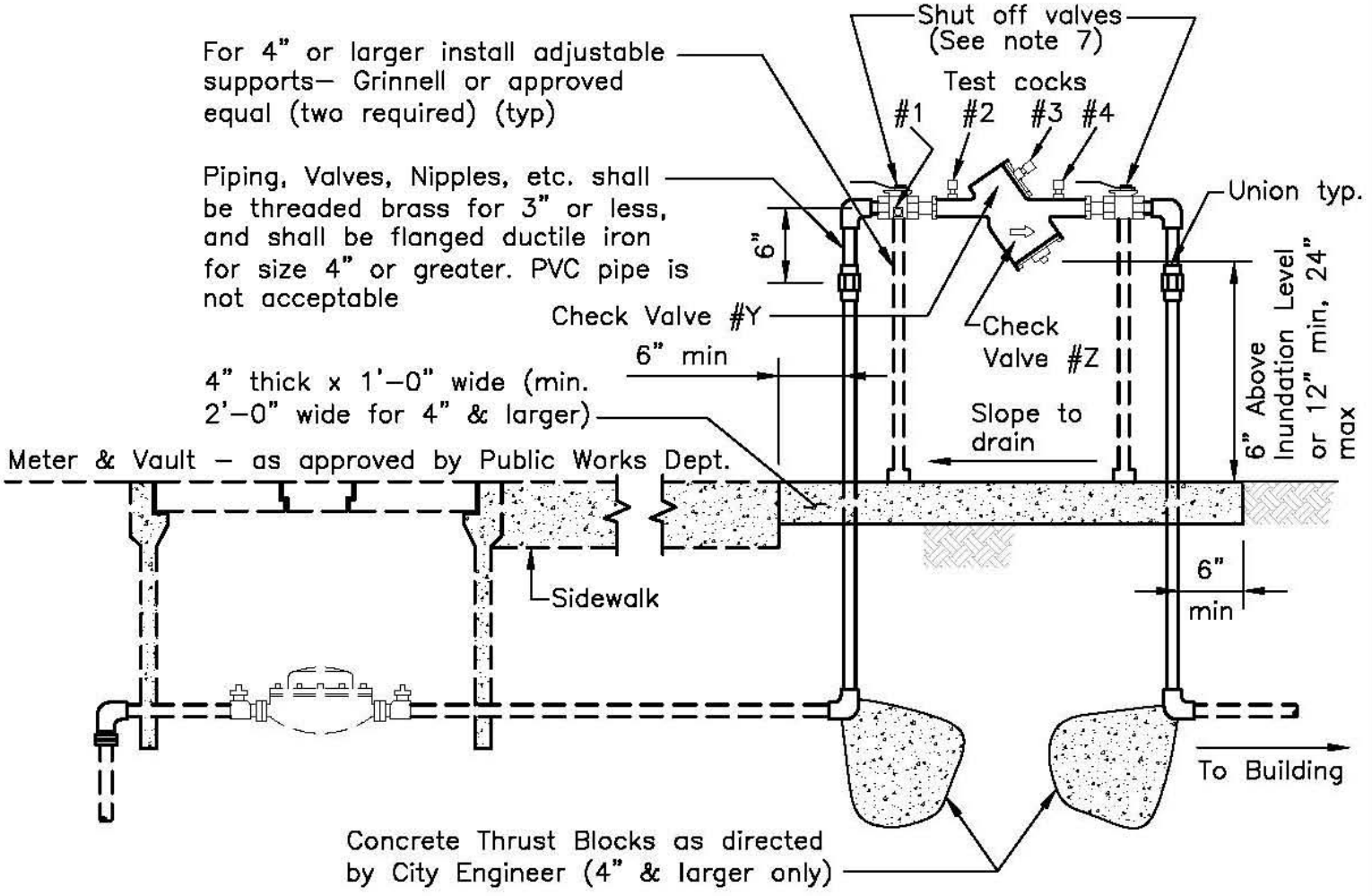

NOTES:

1. Approved Backlow Prevention Assembly shall be as shown on "List of Approved Backflow Devices" of latest revision, by the University of Southern California Foundation for Cross Connection Control & Hydraulic Research.
2. Backflow Prevention Assemblies shall be installed adjacent to and on property side of sidewalk where applicable. Where no sidewalk exists, the assembly shall be installed as close as possible to the water meter location.
3. Any cover or screening for the Backflow Prevention Assembly must be approved by the Public Works Department prior to installation.
4. The piping from the Backflow Preventer Assembly must be the same size as the service line unless otherwise approved by the City Engineer.
5. Concrete shall be Class "B" per Caltrans specifications.
6. After installation, the Backflow Prevention Assembly shall be tested and certified by a certified tester. Obtain test forms from City of Sonoma Public Works Department.
7. Valves 2"ø and less shall be ball valves. Valves 3"ø and greater shall be resilient seat gate valves.

REVIEWED BY Toni Bertolero
CITY ENGINEER

APPROVED BY
PUBLIC WORKS DIRECTOR

10-7-09
DATE

NO.	REVISION DATE	BY

STANDARD PLAN

274

City of Sonoma
PUBLIC WORKS DEPARTMENT

DOUBLE CHECK VALVE INSTALLATION 1", 1 ½" AND 2"

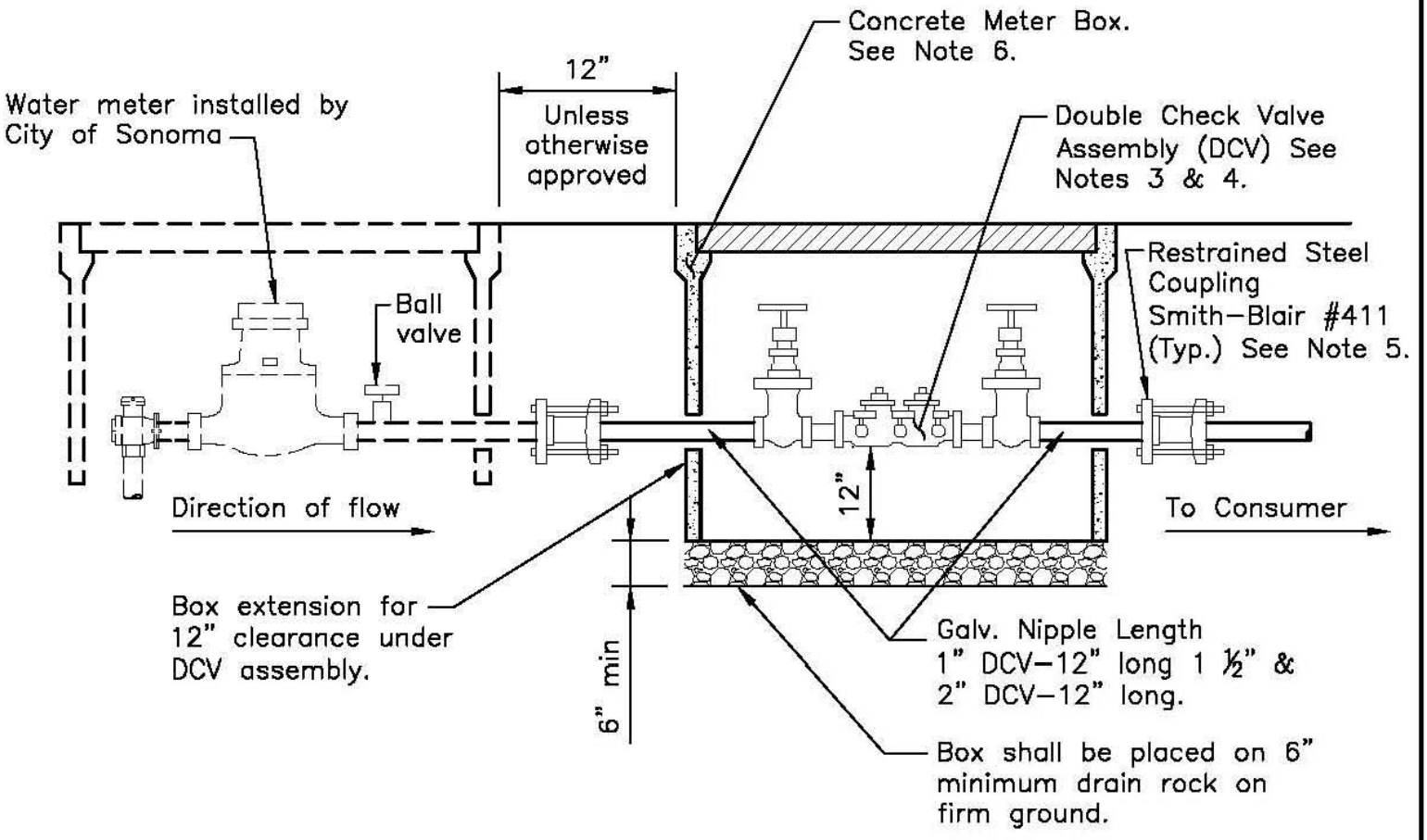

NOTES:

1. It is the consumer's responsibility to have the double check valve assembly checked on a yearly basis and to keep it in good operating condition.
2. All test cocks must be plugged with approved brass fittings.
3. DCV assembly must be on CDPH current list of approved backflow prevention devices.
4. DCV must be inspected and tested by a certified (AWWA) backflow prevention device tester and his report filed with the City Public Works Department prior to the water service being turned on.
5. Steel coupling shall be installed on existing water lines.
6. Use Christy B16D box and B16D lid (B16C in traffic area) for ¾" and 1" DCV. Use Christy B36 box and B36E lid (B36–61G in traffic area) for 1–½" and 2" DCV.

NOTE:
Below grade installation shown on this drawing shall not be used unless specifically authorized by the Public Works Director.

REVIEWED BY Toni Bertolero
CITY ENGINEER
APPROVED BY
PUBLIC WORKS DIRECTOR
10-7-09
DATE

NO.	REVISION DATE	BY

STANDARD PLAN

275

City of Sonoma
PUBLIC WORKS DEPARTMENT

WATER VALVE INSTALLATION

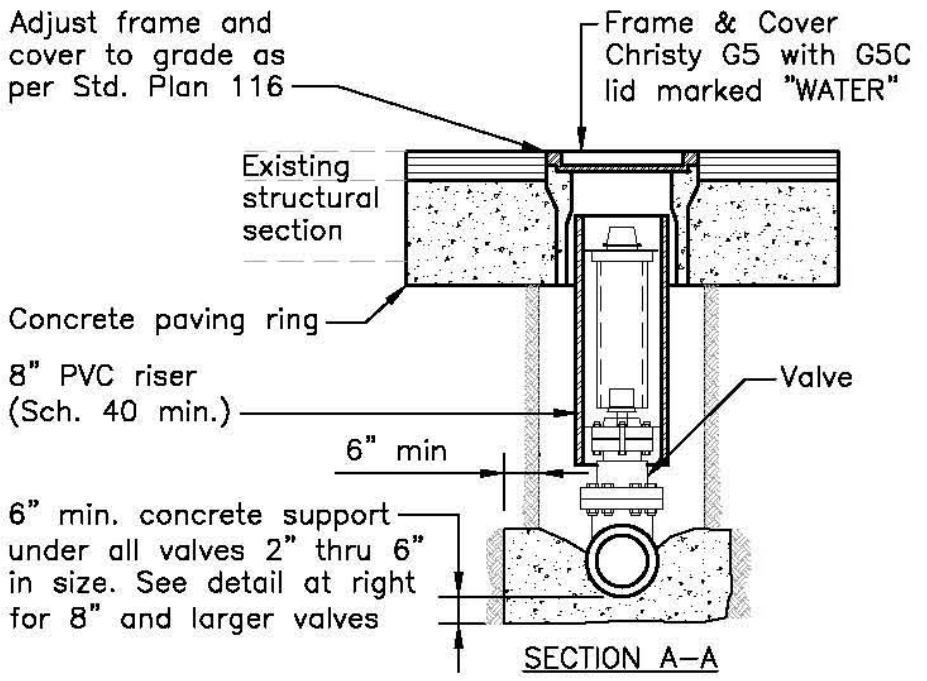

SECTION A–A

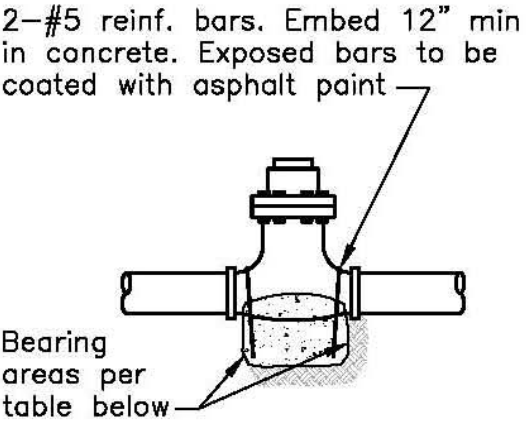

THRUST BLOCK AND SUPPORT

(8" and larger valves)

Valve Size (in)	Thrust block bearing area (ft^2)
8	5 min
10	8 min
12	12 min
14	16 min

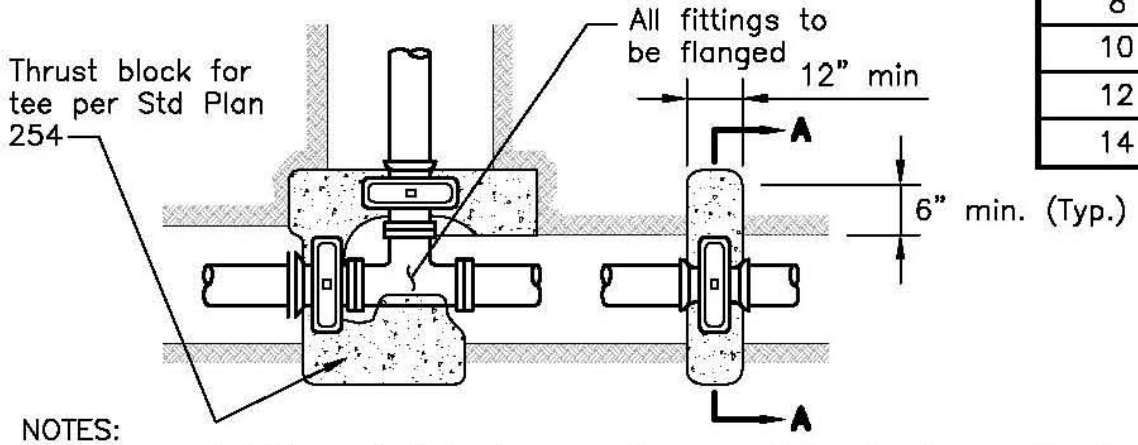

NOTES:

1. Valves and fittings shall be temporarily supported prior to construction of concrete supports (redwood or pressure treated) and thrust blocks in a manner satisfactory to the Civil Engineer.
2. Backfill shall conform to Std. Plan 501.
3. Concrete shall be Class "B", per Caltrans specifications. Thrust blocks and supports shall be poured against undisturbed earth.
4. Water valves shall be resilient seated gate valves with non rising stem and 2–inch operating nut. (AWWA C–509) for 8" and smaller valves. Water valves 10" and larger shall be short body, Class 150–B butterfly valves with 2" operating nut. (AWWA C–504). Valves shall open counterclockwise.
5. Bolts and nuts for flanged connections shall be stainless steel.
6. Provide valve stem riser if operating nut is greater than 30" below finished grade.
7. All mechanical joints shall be restrained.

REVIEWED BY Toni Bertolero
CITY ENGINEER

APPROVED BY
PUBLIC WORKS DIRECTOR 10-7-09 DATE

NO.	REVISION DATE	BY

STANDARD PLAN

277

City of Sonoma
PUBLIC WORKS DEPARTMENT

FIRE SPRINKLER SERVICE INSTALLATION - 4" THRU 8"

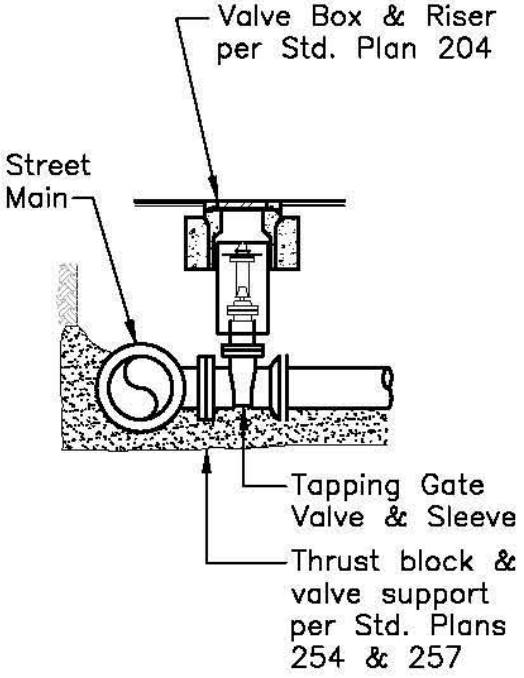

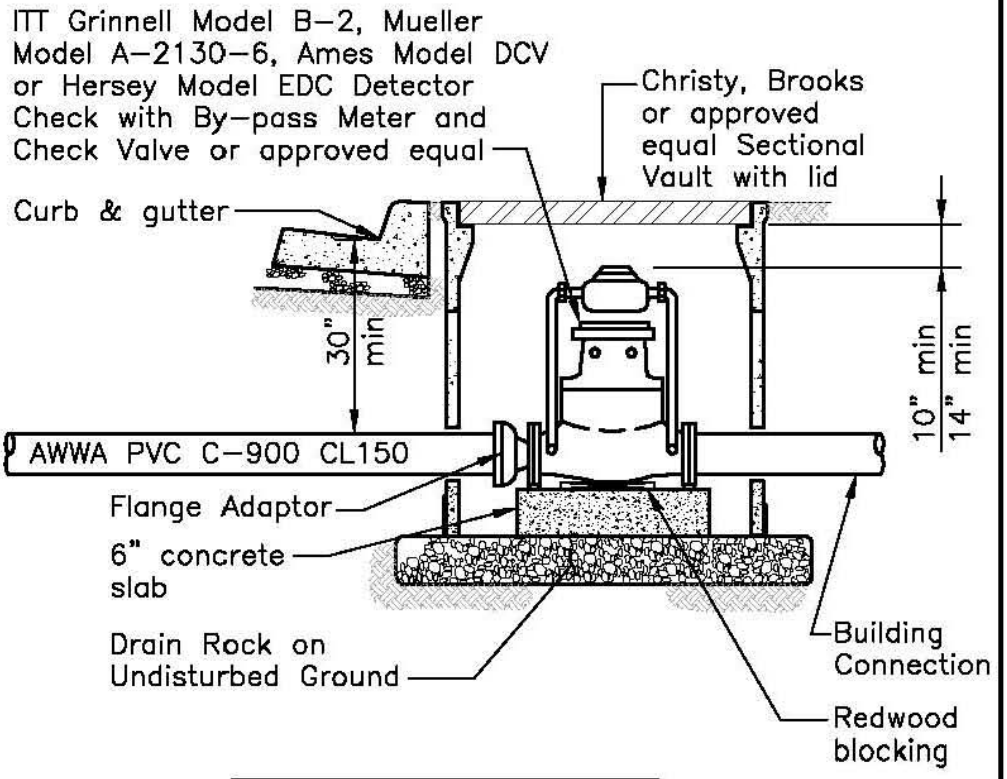

BY-PASS METER	
D.C. Size	Meter Size
4" & 6"	⅝" x ¾"
8"	1"

CHRISTY VAULT (DAE)		
D.C. Size	Model No.	Lid – See Note 4
4"	B40	B40M or B40-61G
6"	B48	B48M or B48-62G
8"	B48	B48M or B48-62G

NOTES:
1. Gate Valves shall be operated by City Water Department personnel only.
2. All work is subject to inspection by the City of Sonoma Public Works Department. Approval required prior to commencing work.
3. Bolts and nuts for flanged connections shall be stainless steel.
4. Steel lid shall be used in traffic areas.
5. Bypass meter must be directly underneath reading lid.
6. Concrete shall be Class "B" per Caltrans specifications.

NOTE:
THIS DETAIL MAY BE USED ONLY WITH SPECIFIC APPROVAL OF THE CITY ENGINEER.

REVIEWED BY Toni Bertolero
CITY ENGINEER
APPROVED BY
PUBLIC WORKS DIRECTOR 10-7-09 DATE

NO.	REVISION DATE	BY

STANDARD PLAN

280-A

City of Sonoma
PUBLIC WORKS DEPARTMENT

FIRE SPRINKLER SERVICE INSTALLATION - 4" THRU 8"

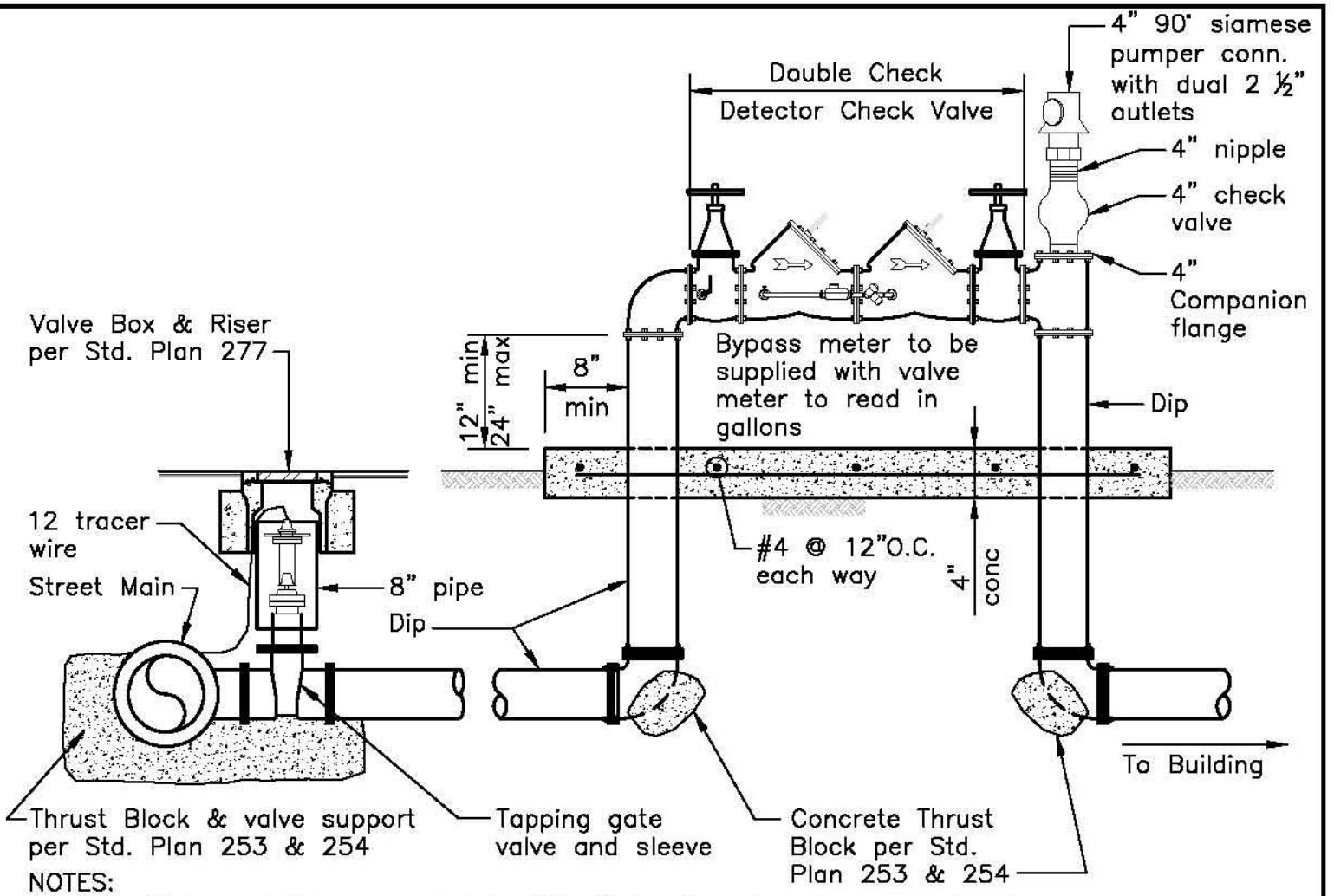

NOTES:

1. Gate Valves shall be operated by City Water Department personnel only.
2. Backfill shall conform to Std. Plan 501.
3. Concrete shall be Class "B". Thrust blocks shall be poured against undisturbed earth.
4. Water will not be turned on until installation is approved by City.
5. Water valves shall meet (AWWA C–509) with O.S. & Y.
6. Approved Double Check Detector. Check backflow assemblies shall be as shown on "List of Approved Backflow Devices" of latest revision, by the University of Southern California Foundation for Cross Connection Control & Hydraulic Research.
7. All Resilient valves must be chained and padlocked in open position. Chain size ¼" or larger.
8. Double Check–Detector Check Assembly shall be located as close as possible to the sidewalk or public right–of–way.
9. Provide UL listed Fire Department Connection (FDC) with 4" check valve.
10. Restrained joints are required for all new construction from water main to 90° elbow on downstream side of double detector check. Thrust blocks shown and only required where existing services are being modified and restrained joints are not used.
11. Bollards are required in areas that are subject to vehicle impact or as required by the City Engineer.

REVIEWED BY Toni Bertolero
CITY ENGINEER

APPROVED BY
PUBLIC WORKS DIRECTOR 10-7-09 DATE

NO.	REVISION DATE	BY

STANDARD PLAN

280-B

City of Sonoma

PUBLIC WORKS DEPARTMENT

AIR RELEASE VALVE

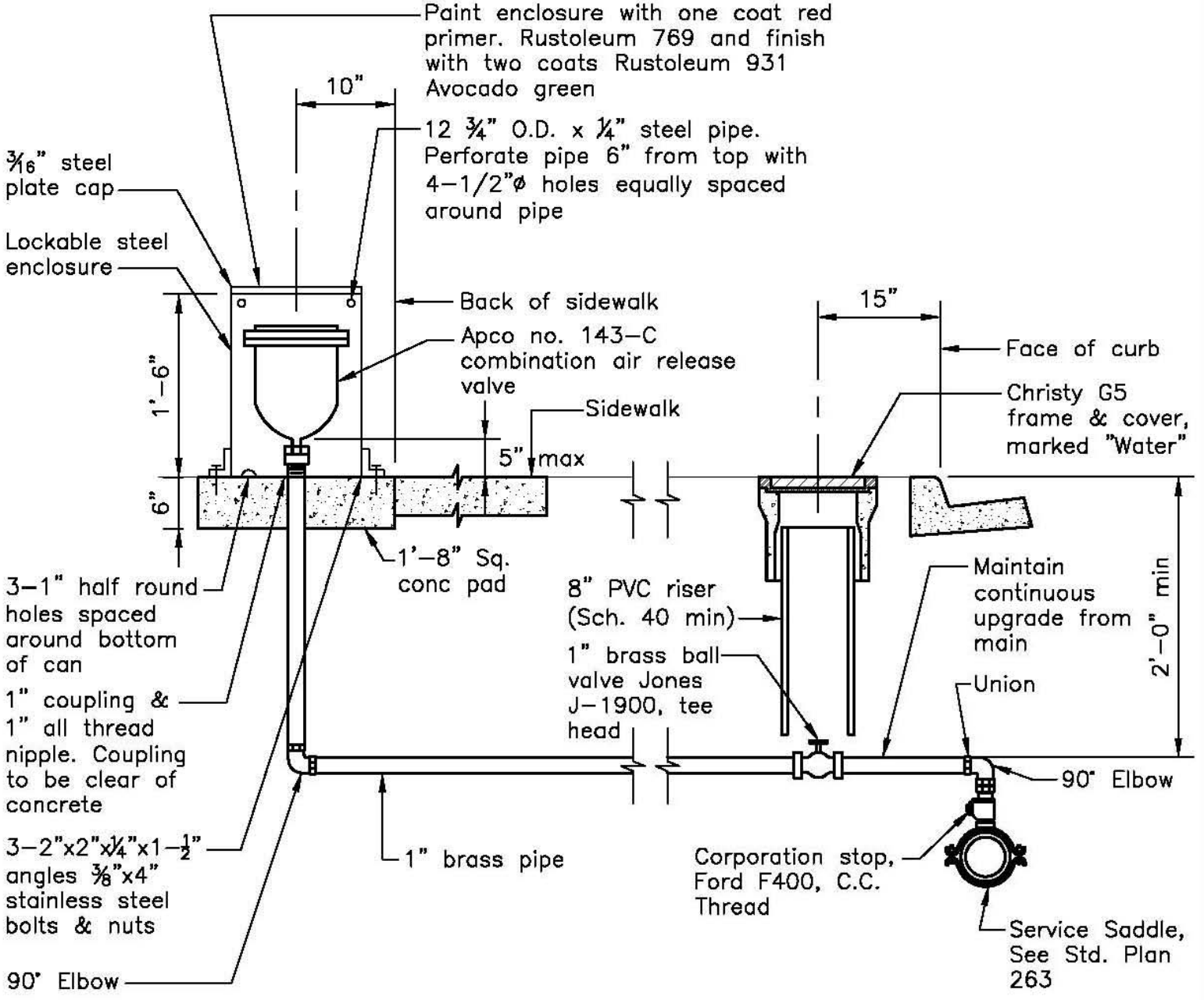

NOTES:

1. All concrete shall be Class "B" per Caltrans specifications.
2. Above ground fittings shall be galvanized malleable iron.
3. Below ground fittings shall be PVC Type 1, Schedule 80, Iron pipe threads.
4. Pipe shall be PVC, Schedule 80, AWWA C900–75, Iron pipe thread, except that threaded PVC adaptors may be used.

REVIEWED BY Toni Bertolero
CITY ENGINEER

APPROVED BY
PUBLIC WORKS DIRECTOR

10-7-09
DATE

NO.	REVISION DATE	BY

STANDARD PLAN

283

City of Sonoma

PUBLIC WORKS DEPARTMENT

WATER SAMPLING STATION

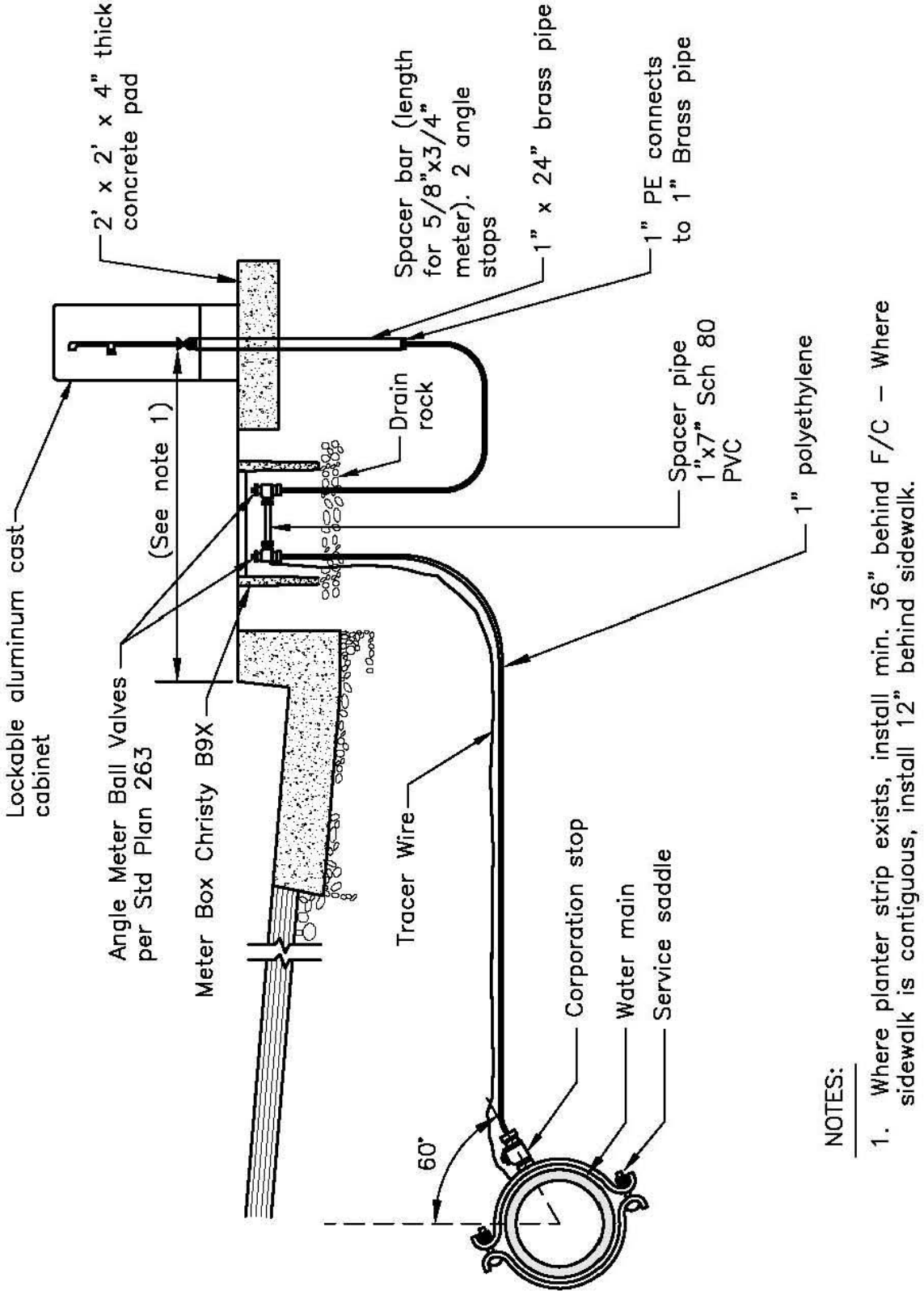

NOTES:

1. Where planter strip exists, install min. 36" behind F/C – Where sidewalk is contiguous, install 12" behind sidewalk.

APPROVED TAPPING SERVICE SADDLES:

(See Engineer's Approved List for Standard 263)

REVIEWED BY Toni Bertolero
CITY ENGINEER

APPROVED BY
PUBLIC WORKS DIRECTOR

10-7-09
DATE

NO.	REVISION DATE	BY

STANDARD PLAN

286

City of Sonoma

PUBLIC WORKS DEPARTMENT

48" AND 60" STORM DRAIN MANHOLE

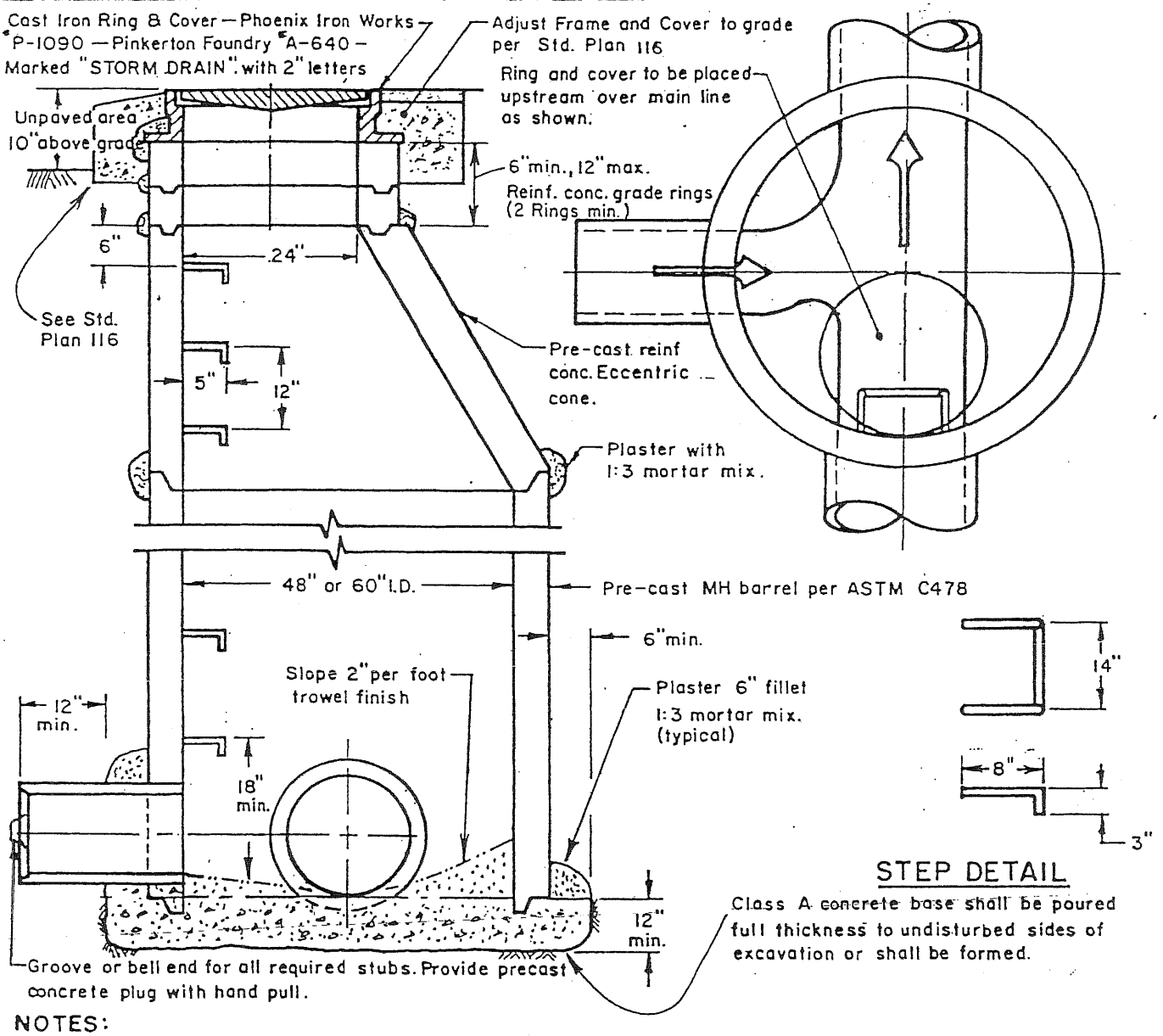

NOTES:

1. 48" Dia MH may be used for all pipes up to 36" in diameter. For pipes 39" — 48" a 60" dia. MH shall be used.
2. All concrete joints shall be cleaned, wetted and mortared prior to setting the next section. Joints shall be packed, troweled and brushed while mortar is still plastic.
3. All MH shall be raised to grade after placing asphalt concrete.
4. Steps shall be 3/4" round steel rod, galvanized after fabrication and install on vertical wall.
5. Precast plug shall also be placed on inside of MH where indicated on the plans.
6. RAM-NEK or approved equal may be used in joints, eliminating necessity for outside mortaring.
7. Concentric cones (no steps) or reducer slabs may be approved for shallow manholes. Use only when approved by the City Engineer.

APPROVED BY

Richard L. Rowland

PUBLIC WORKS DIRECTOR

DATE 4-12-77

NO.	REVISION DATE	BY
1	2-11-80	P.W.
2	1-11-82	P.W.
3	2-21-86	P.W.

STANDARD PLAN 301

City of Sonoma
PUBLIC WORKS DEPARTMENT

CURB INLET CATCH BASIN

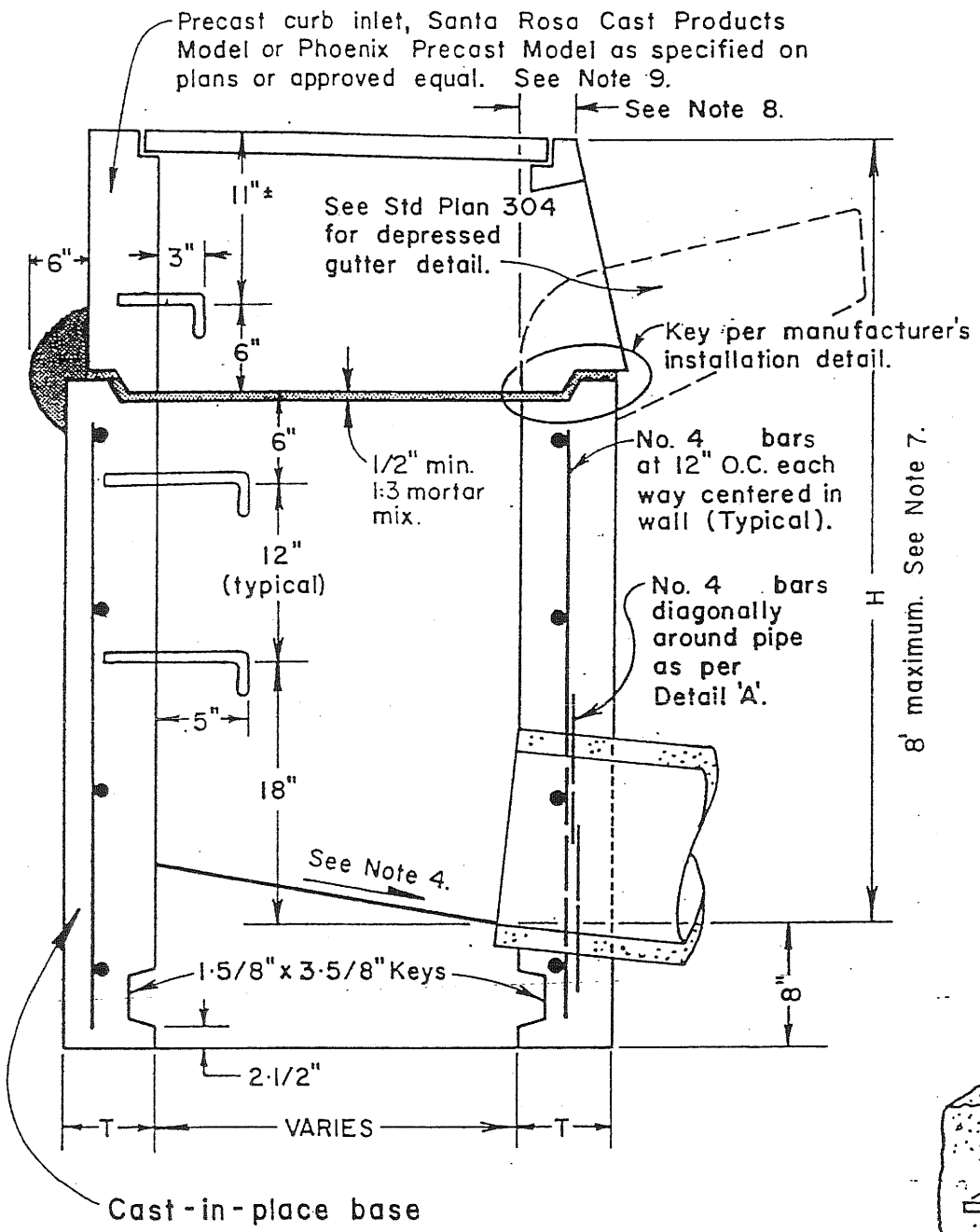

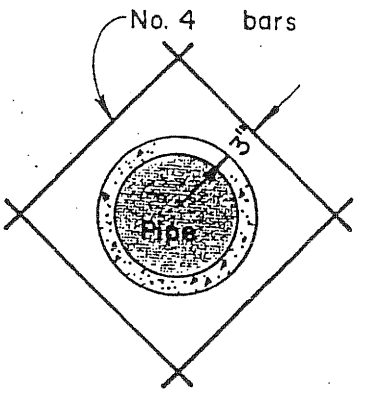

DETAIL 'A'

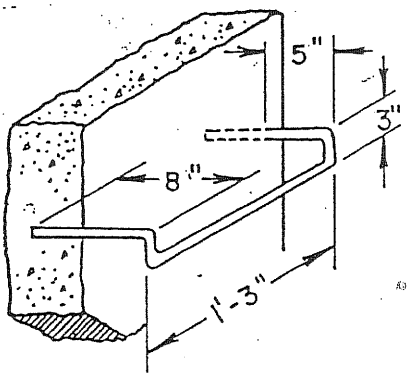

STEP DETAIL
(excluding top step)

SEE SHEET 2 OF 2 FOR NOTES.

APPROVED BY
Richard N. Powland
PUBLIC WORKS DIRECTOR 7-7-86 DATE

NO.	REVISION DATE	BY
1	5·11·87	P.W.

STANDARD PLAN 303

SHEET 1 OF 2

City of Sonoma
PUBLIC WORKS DEPARTMENT

CATCH BASIN NOTES

GENERAL NOTES

1. Concrete Specifications: Class "A" P.C.C.
   1-1/2" max. aggregate, 4" max. slump.
2. No concrete shall be placed prior to form and reinforcing steel approval by the City of Sonoma.
3. Bottom shall be placed against undisturbed earth. Sides may be formed or placed against undisturbed earth except that wall thickness shall not exceed 10".
4. Basin floors shall have trowel finish and a slope of 2" per foot in all directions from outlet pipe.
5. Steps shall be 3/4" round steel rod, galvanized after fabrication and installed prior to concrete placement.
6. Steps shall not be required where "H" is less than 3 feet.
7. Where "H" is over 8 feet, the cast-in-place base shall be as detailed on the project plans.
8. The horizontal distance between face of curb and inside wall vary. See Santa Rosa Cast Products or Phoenix Precast Installation Detail for appropriate curb inlet model.
9. Curb inlet shall have cast iron frame and cover.
10. All concrete joints shall be cleaned, wetted and mortared prior to setting precast top.
11. See plan for "H" dimension and table below for "T" dimension.

HEIGHT "H"	WALL THICKNESS "T"	WALL REINFORCEMENT
0' to 4'	6"	———
4' to 8'	8"	No. 4 at 12" O.C. both ways
over 8'	See Note 7	

APPROVED BY
Richard L. Rowland
PUBLIC WORKS DIRECTOR 7-9-86 DATE

NO.	REVISION DATE	BY
1	5-11-87	P.W.
2	4-11-91	P.W.

STANDARD PLAN 303
SHEET 2 OF 2

City of Sonoma
PUBLIC WORKS DEPARTMENT

CURB INLET GUTTER DEPRESSION

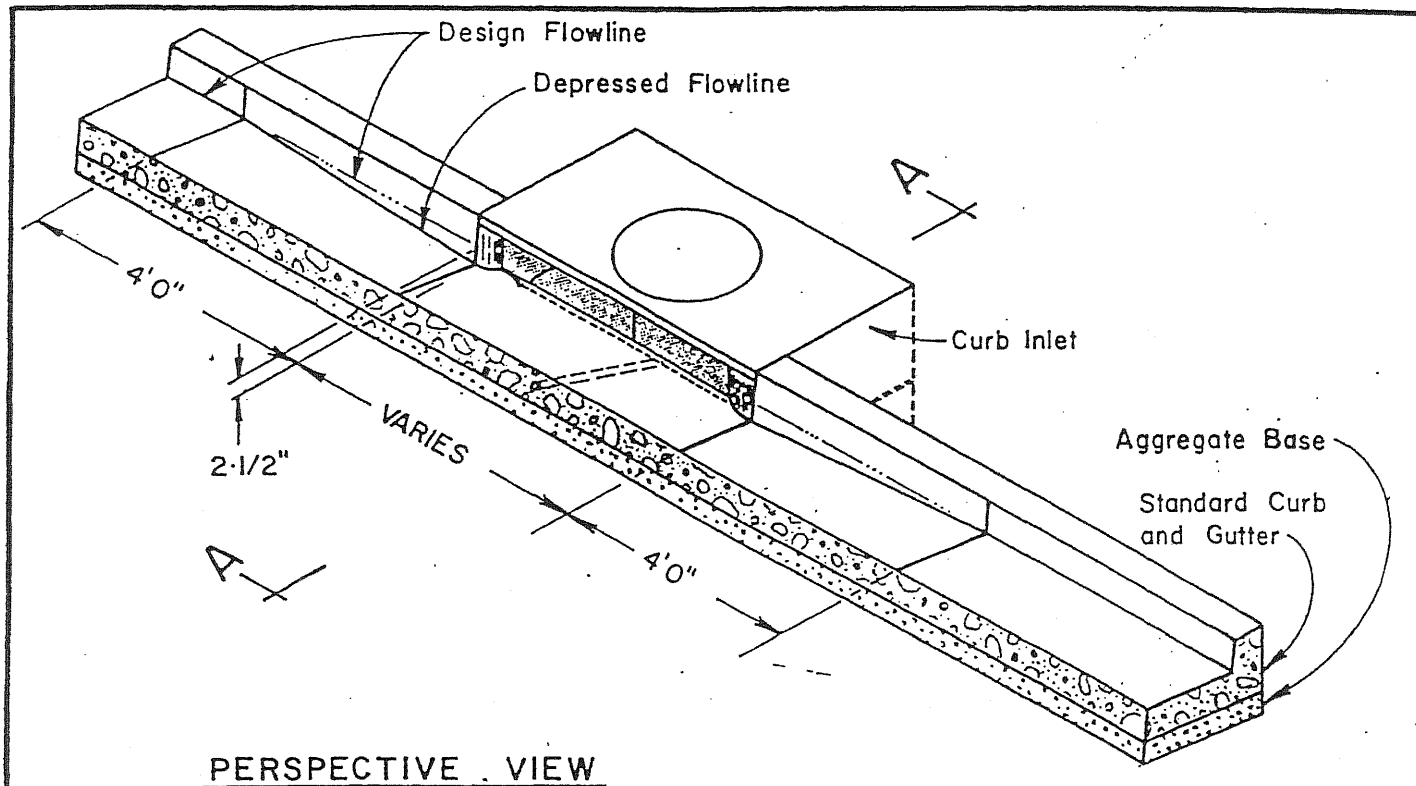

PERSPECTIVE VIEW

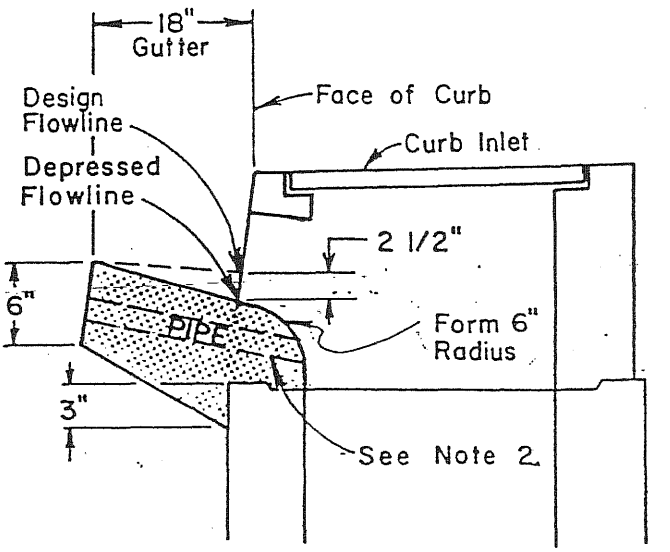

SECTION A-A

NOTES:

1. Concrete Specifications: Class B concrete per Caltrans specifications, 1" or 1-1/2" max. aggregate, 4" max. slump.
2. A 2" diameter plastic pipe shall be placed through the center of the gutter as shown and shall be cut flush with concrete and completely plugged with grout prior to paving. Pipe may be deleted when approved by the City Engineer.

APPROVED BY

Richard L. Rowland

PUBLIC WORKS DIRECTOR 7-9-86 DATE

NO.	REVISION DATE	BY
1	5-11-87	P.W.
2	3-19-96	M.H.

STANDARD PLAN 304

City of Sonoma

PUBLIC WORKS DEPARTMENT

STORM DRAIN CONNECTION WITHOUT MANHOLE

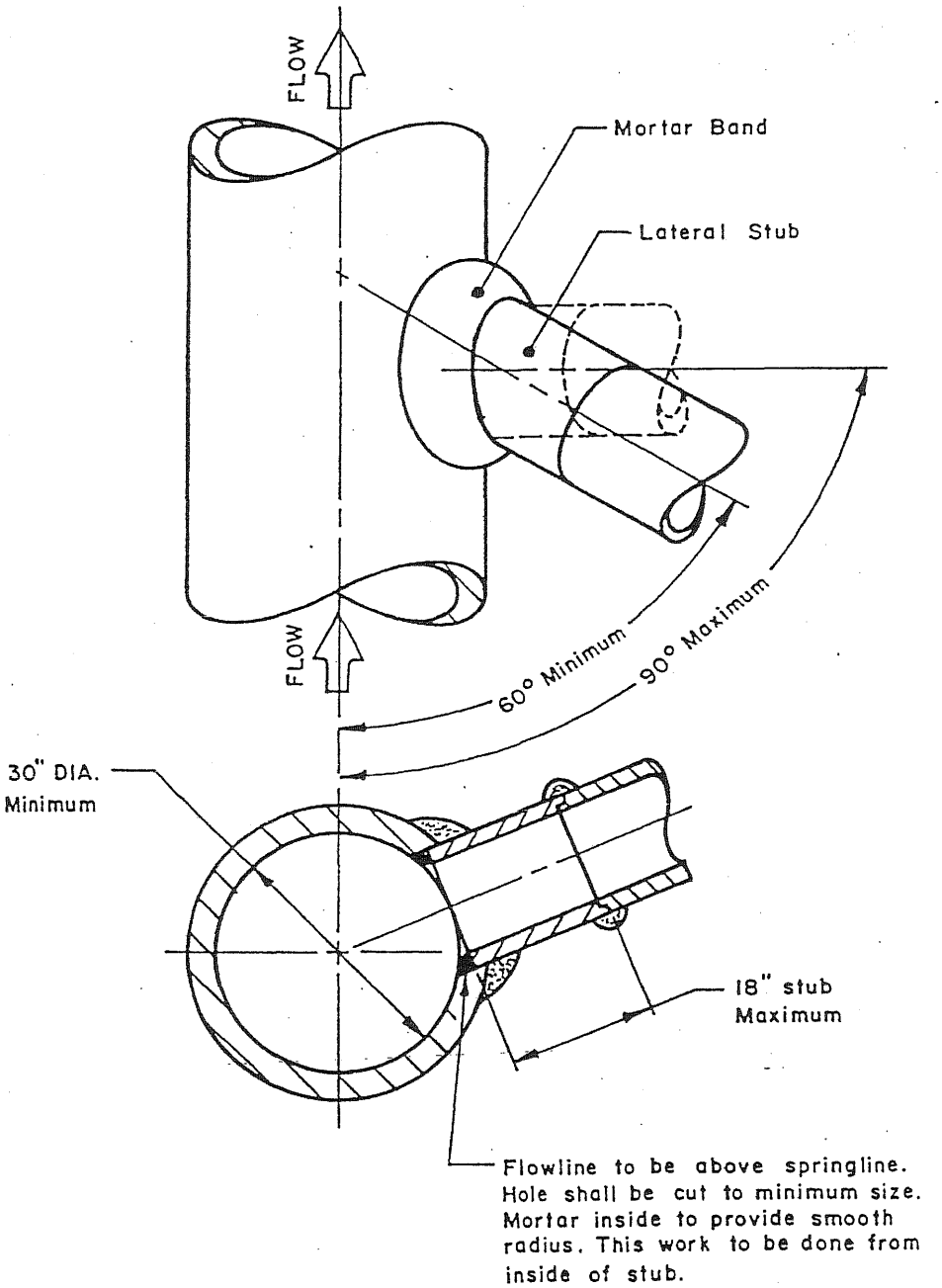

NOTES:

1. Diameter of main must be (2.5)x(Lateral Dia.). Minimum main diameter is 30".
2. Special approval shall be received from City Engineer prior to using this detail.
3. This detail will be allowed only in RCP. Not permitted in Cast—in—Place Concrete Pipe.

APPROVED BY

Robert L. Burland

PUBLIC WORKS DIRECTOR

DATE 11-28-79

NO.	REVISION DATE	BY

STANDARD PLAN 305

City of Sonoma
PUBLIC WORKS DEPARTMENT

STREET LIGHTING GENERAL NOTES

STREET LIGHTING GENERAL NOTES

1. The developer or his engineer shall make arrangements for service points with PG&E. The developer shall be responsible for all costs associated therewith which shall be paid directly to PG&E. The contractor shall verify the street light service point locations with PG&E prior to installation.

2. All street lighting materials and workmanship must meet the standards and requirements of the Pacific Gas and Electric Company and shall be acceptable to PG&E for use in systems maintained by that company. All workmanship and materials must also be satisfactory to the City Engineer.

3. Each luminaire shall have an individual photoelectric control (twist lock type) and shall be adjusted for the IES light distribution specified on the plans.

4. Embedded steel poles shall be set in 18" diameter drilled holes. Prior to setting the pole, all loose material shall be removed from the drilled excavation and the bottom thoroughly tamped. Class 2 aggregate base material shall be compacted in the bottom of the hole if required by the City Engineer. The pole shall then be centered in the drilled hole and the hole backfilled with compacted Class 2 aggregated base material. In unpaved areas, the upper 12" of the excavation shall be backfilled with compacted native material.

5. Lamp wattage shall be identified by use of a 3" x 3" decal located on the lower side of the luminaire behind the refractor.

6. Ballasts shall be 120 volt reactor type.

7. All underground conductors shall be placed in 1-½" P.V.C. Sch. 40 conduit. Minimum radius of conduit bends shall be 18". No field bends of plastic conduit will be permitted.

8. Minimum cover of underground conduit shall be 24" in sidewalk areas and 30" in all other areas.

9. All splices to be approved solderless waterproof connectors of proper size.

10. All material shall be new and shall be in perfect condition after installation.

11. Materials, workmanship and installation shall conform with all requirements of the legally constituted authorities having jurisdiction and with all applicable codes and regulations.

APPROVED BY
Richard L. Rowland
PUBLIC WORKS DIRECTOR 3-18-85 DATE

NO.	REVISION DATE	BY
1	4-12-91	P.W.

STANDARD PLAN 400

12. All electrical materials shall be as recognized by the Underwriters' Laboratories, Inc., shall bear the Underwriters' Laboratories Inc. label and/or be listed by the laboratories, whichever is applicable.

13. All conductors shall conform to the latest requirements of the National Electric Code and be labeled by Underwriters' Laboratories, Inc. Wire size, insulation type and manufacturer's name shall be permanently marked on the conductor jacket at regular intervals. Wire shall be color-coded with a separate color for each phase. White shall be used for neutral conductors only, and green shall be used for the equipment ground conductors. Conductors shall be AWG #10 or larger, THW copper.

14. All poles, conduit and other facilities shall be properly grounded in accordance with applicable codes and accepted practice. Ground wires and bonding jumpers shall be AWG #6 bare copper wire or equivalent.

15. The contractor shall inspect and make necessary tests which the City Engineer may request to insure that the electrical equipment is installed correctly and that the wiring systems are free of all shorts, grounds, and faulty connections and have insulation resistance between conductors and ground of not less than the requirements of the National Electric Code.

16. All work and materials are subject to inspection and approval by the City Public Works Department (938-3794). The contractor shall contact the Public Works Department to determine when inspections will be required and shall then provide the Department 24 hours notice prior to the need for required inspections.

17. Except as otherwise provided, the following PG&E drawings shall be applicable to street lighting projects in the City of Sonoma:

- Dwg. No. 015132 Sht. Nos. 1 and 3 — Street Light Installation on Wood Poles
- Dwg. No. 015133 Sht. No. 1 - Mast Arms for Street Lighting
- Dwg. No. 015134 Sht. Nos. 1 and 2 — Brackets for Street Lighting
- Dwg. No. 015136 Sht. Nos. 1, 2, 4, 9 and 15 — Street Lighting Poles
- Dwg. No. 015137 Sht. Nos. 1, 2, and 3 — Identification of Street Light Luminaires
- Dwg. No. 053307 Sht. Nos. 1 and 3 — High Pressure Sodium Vapor Luminaires

APPROVED BY
Richard L. Rowland
PUBLIC WORKS DIRECTOR
DATE 3-18-85

NO.	REVISION DATE	BY
1	4-12-91	P.W.
2	1-5-94	P.W.

STANDARD PLAN 400

City of Sonoma
PUBLIC WORKS DEPARTMENT

STREET LIGHT POLE AND CONDUIT STANDARD LOCATIONS

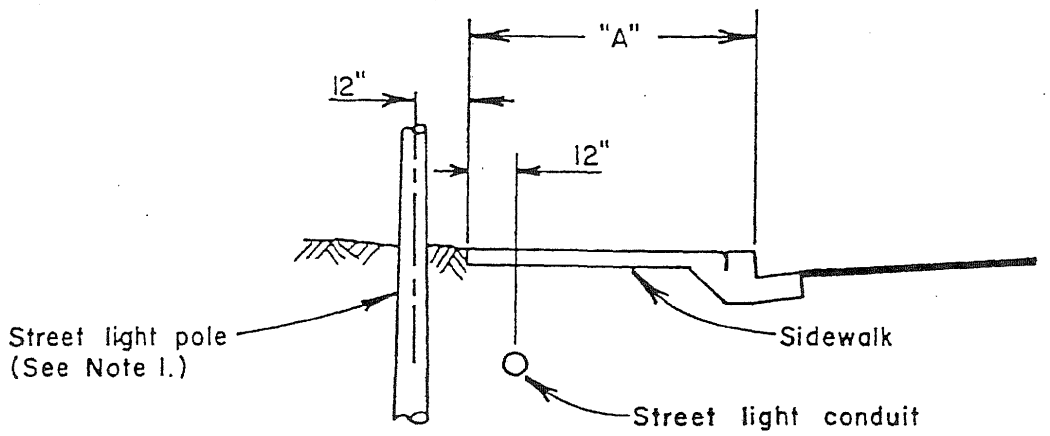

TYPE B SIDEWALK (STD. PLAN 110)

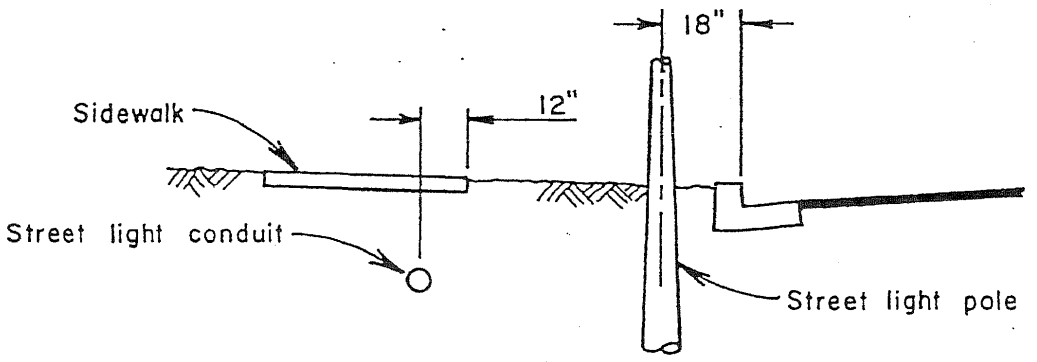

TYPE A SIDEWALK (STD. PLAN 108)

NOTES:

1. Where "A" is less than 5' street light pole will be located behind sidewalk. Where "A" is 5' or more pole will be located behind curb in same location as for Type A sidewalk.
2. The minimum cover of conduit shall be as specified on Std. Plan 400.
3. Location of conduit will vary from that shown hereon if so specified on specific project plans or if placed in a joint trench with other underground utilities.

APPROVED BY
Richard L. Loveland
PUBLIC WORKS DIRECTOR 7/22/87 DATE

NO.	REVISION DATE	BY

STANDARD PLAN 401

City of Sonoma

PUBLIC WORKS DEPARTMENT

PIPE BEDDING AND BACKFILLING REQUIREMENTS

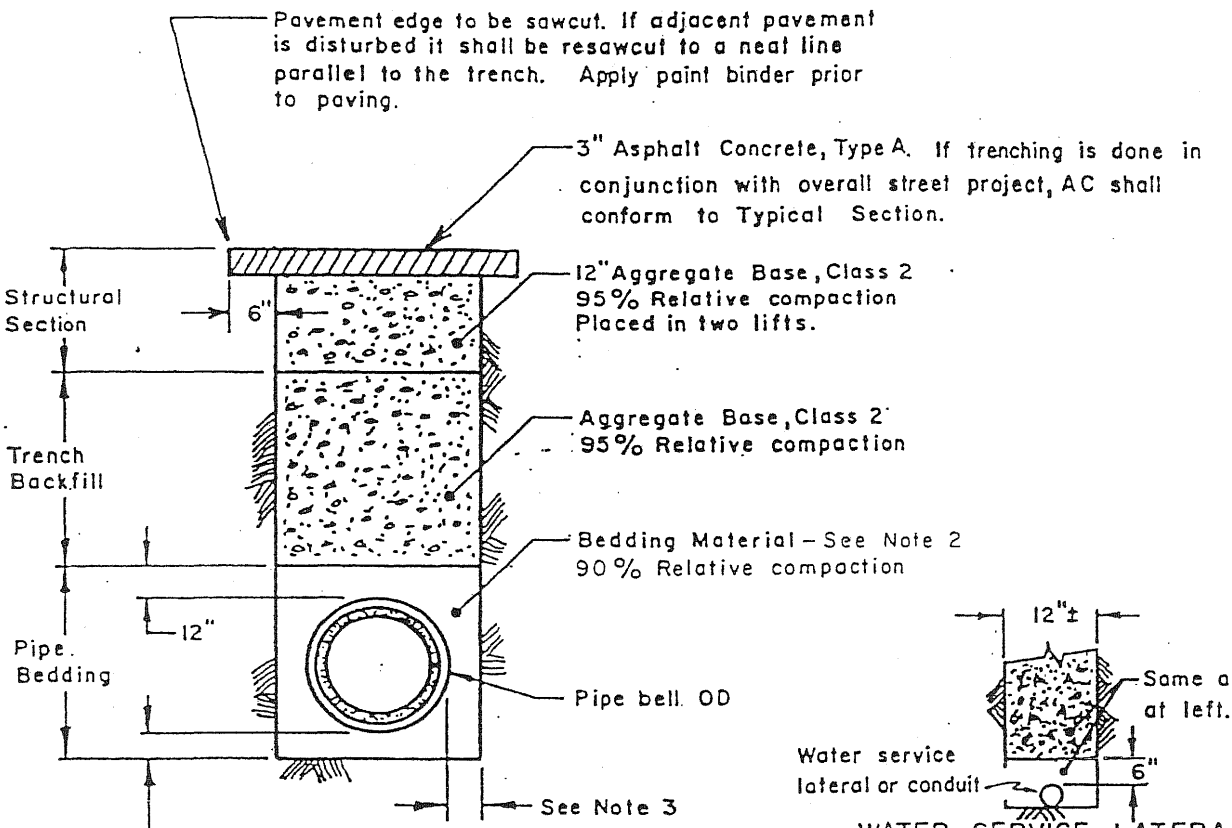

PAVEMENT AREA

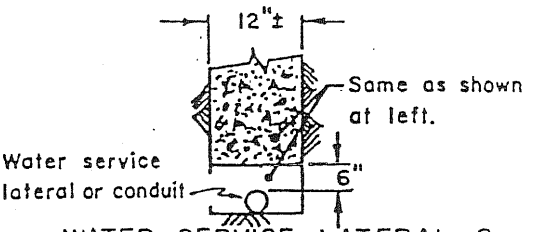

WATER SERVICE LATERAL & STREET LIGHT CONDUIT

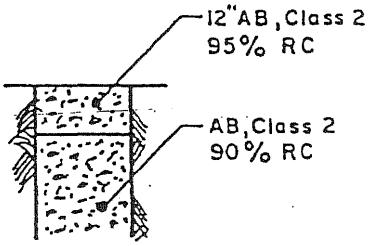

SHOULDER AREA

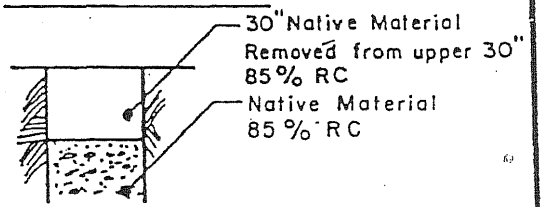

PUE or UNDEVELOPED AREA

NOTES:

1. Where pipe is to be installed in a new street the Structural Section shall conform to that shown on the improvement plan.
2. Pipe Bedding shall have minimum sand equivalent of 30 and shall conform to following grading:

1"	3/4"	3/8"	#4	#200
100%	90-100	65-100	30-100	0-15

3. Pipe ID 18" or Less — 6" min., 9" max.
   Pipe ID Greater than 18" — 9" min., 12" max.
4. Paint binder shall be SS-1, SS-1h or RS-1.
5. Trench backfill compaction certification is required prior to pressure testing water pipe.

APPROVED BY

John J. Bernardi

CITY ENGINEER

5-5-97

DATE

NO.	REVISION DATE	BY
9	1-20-94	P.W.
10	5-5-97	J.B.
7	9-11-90	P.W.
8	4-11-91	P.W.

STANDARD PLAN

501

City of Sonoma

PUBLIC WORKS DEPARTMENT

SILT FENCE

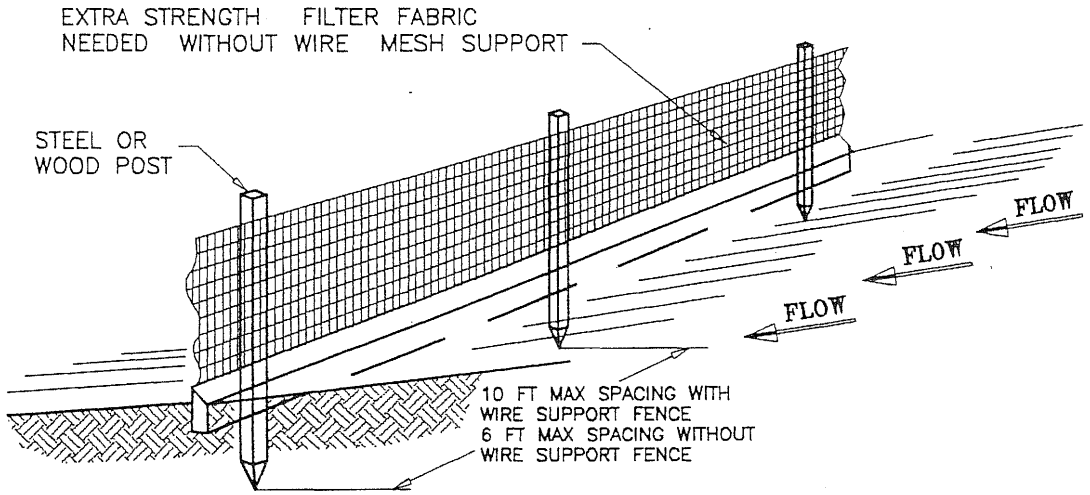

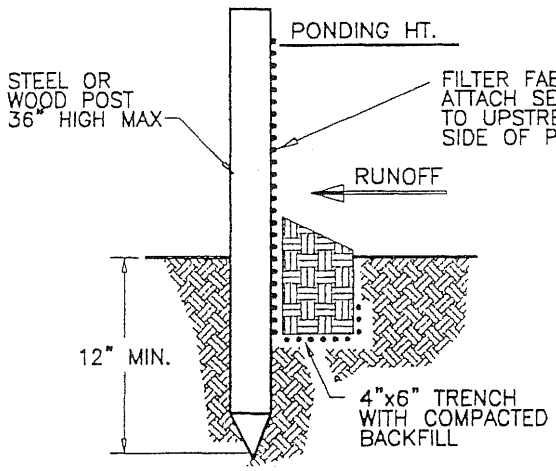

STANDARD DETAIL

TRENCH WITH NATIVE BACKFILL

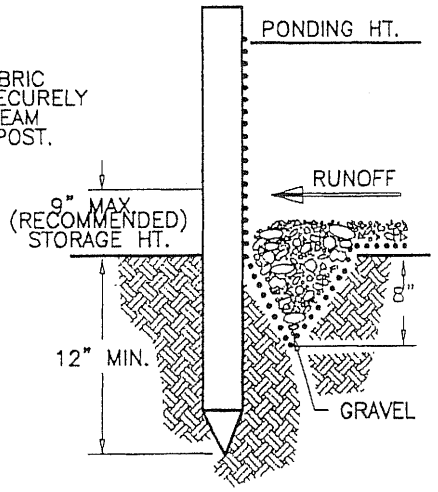

ALTERNATE DETAIL

TRENCH WITH GRAVEL

NOTE:

1. INSPECT AND REPAIR FENCE AFTER EACH STORM EVENT AND REMOVE SEDIMENT WHEN NECESSARY.
2. REMOVED SEDIMENT SHALL BE DEPOSITED TO AN AREA THAT WILL NOT CONTRIBUTE SEDIMENT OFF-SITE AND CAN BE PERMANENTLY STABILIZED.
3. SILT FENCE SHALL BE PLACED ON SLOPE CONTOURS TO MAXIMIZE PONDING EFFICIENCY.

APPROVED BY

CITY ENGINEER

NO.	REVISION DATE	BY

STANDARD PLAN **502**

City of Sonoma

PUBLIC WORKS DEPARTMENT

STANDARD DRAFTING SYMBOLS

EXISTING	CONSTRUCT	
		— Centerline
		— Right-of-way
		— Property Line
18"SD	18"SD	— SD, SS or W (type and size) as noted)
2"HPG		— Other Underground Utilities (type and size as noted)
		— Curb, gutter and sidewalk
		— Manhole
		— Sanitary Sewer Cleanout
		— Side Inlet Catch Basin
		— Curb Inlet Catch Basin
FH	FH	— Fire Hydrant
		— Water Valve
		— Blow-off
		— Cross, Tee & Elbow
	22 1/2°	— Reducer & Bend
		— Cap & Blind Flange
		— Centerline Survey Monument
BM	BM	— City of Sonoma Bench Mark
		— Traffic Signal Head
		— Pedestrian Head
		— Electrolier (mast arm type)
		— Electrolier (concrete standard)
PP TP GP JP		— Utility Pole (type as noted)
		— Guy Anchor
		— Sign (type as noted)
		— Street Name Sign
x x		— Fence (type as noted)
24"		— Deciduous & other Leafed Trees (diameter as noted)
12"		— Palm Tree (diameter as noted)
18"		— Pine, Fir or Cedar Trees (diameter as noted)
		— Hedge or bush
		— Existing Ground or Undisturbed Earth
	0.00 %	— Slope of Invert (% as noted)

APPROVED BY

PUBLIC WORKS DIRECTOR

DATE

NO.	REVISION DATE	BY

STANDARD PLAN 601

City of Sonoma

PUBLIC WORKS DEPARTMENT

STANDARD ABBREVIATIONS

AB	Aggregate base
AC	Asphalt concrete
ACP	Asbestos cement pipe
AVB	Atmospheric vacuum breaker
BC	Begin curve
BCR	Begin curb return
BM	Bench mark monument
BVC	Begin vertical curve
△	Central angle
C,G & S	Curb, gutter and sidewalk
CI	Curb inlet catch basin
CIP	Cast iron pipe
CIPCP	Cast-in-place concrete pipe
℄	Centerline
℄ Mon.	Centerline survey monument
CMP	Corrugated metal pipe
CP	Concrete pipe
Comm. Dwy.	Commercial driveway
Conc.	Concrete
Const.	Construct
Const. Jt.	Construction Joint
Dia.	Diameter
DI	Drop inlet catch basin
Dwy.	Driveway
Ea.	Each
EC	End curve
ECR	End curb return
EG	Existing grade
Elev.	Elevation
EP	Edge of pavement
Ex. 0.00	Existing elevation
Exist.	Existing
Exp. Jt.	Expansion joint
EVC	End vertical curve
FG	Finish grade
FH	Fire hydrant
FL	Flowline
Ga.	Gauge
Galv.	Galvanized
GB	Grade break
GP,JP	Guy, joint use poles
GV	Gas valve
HPG	High pressure gas
IG	Invert grade
Inv.	Invert
L	Arc length
LF	Lineal feet
LPG	Low pressure gas
LS	Lump sum
Max.	Maximum
MH	Manhole
Min.	Minimum
N'ly	Northerly
N,S,E,W	North, South, East, West
NWPRR	Northwestern Pacific Railroad
P	Power (underground)
PB	Pull box
PCC	Point of compound curve
PI	Point of intersection
PL	Property line
PP, TP	Power, telephone poles
PRC	Point of reverse curve
PUE	Public utility easement
R	Radius
RC	Relative compaction
RCP	Reinforced concrete pipe
RCV	Remote control valve
Res. Dwy.	Residential driveway
R/W	Right of way
SCWA	Sonoma County Water Agency
SD	Storm drain
SF	Square feet
Sht.	Sheet
SL	Street light conduit
SS	Sanitary sewer
Sta.	Station
Std.	Standard
Subd.	Subdivision
SVCSD	Sonoma Valley County Sanitation District
SY	Square yards
T	Tangent
TC	Top of curb
Tel.	Telephone (underground)
TS	Traffic signal conduit
TV	Television (underground)
TW	Tree well
Typ.	Typical
VC	Vertical curve
VCP	Vitrified clay pipe
W	Water
WM	Water meter box
WP Jt.	Weakened plane joint
WV	Water valve

APPROVED BY

Richard L. Rowland

PUBLIC WORKS DIRECTOR 2/27/80 DATE

NO.	REVISION DATE	BY
1	2-27-80	P.W.

STANDARD PLAN 602

City of Sonoma

PUBLIC WORKS DEPARTMENT

TITLE BLOCK FOR PRIVATE ENGINEERS

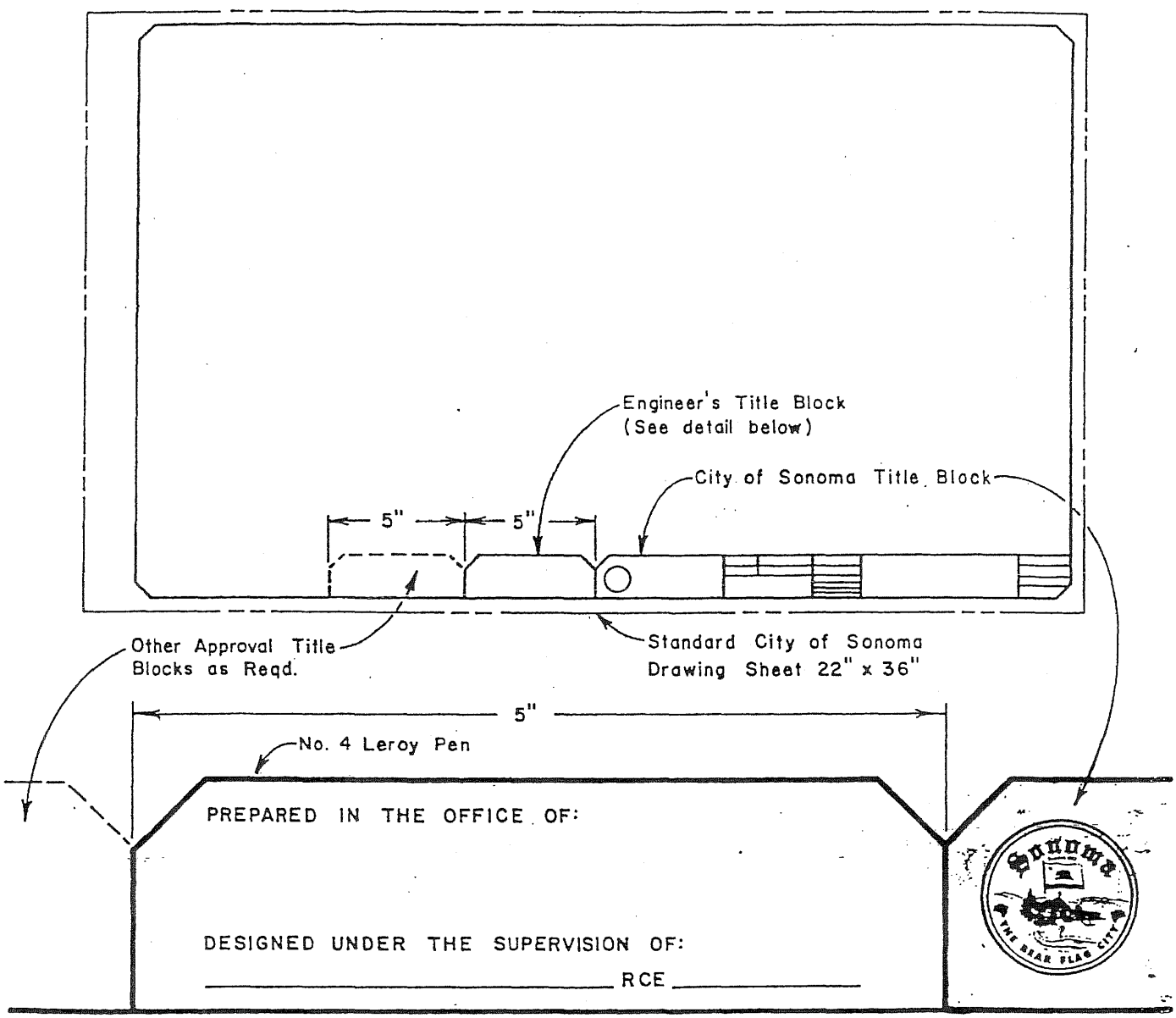

NOTES:

1. The City of Sonoma will furnish standard plan and profile or plain sheets at no cost to the engineer.
2. The standard sheets can be obtained from the Public Works Department, No. 1 The Plaza, Sonoma, California 95476, phone (707) 938-3681

APPROVED BY

Richard L. Rowland

PUBLIC WORKS DIRECTOR

DATE 11-28-78

NO.	REVISION DATE	BY
1	3-10-81	P.W.

STANDARD PLAN 603

City of Sonoma

PUBLIC WORKS DEPARTMENT

STANDARD UTILITY LOCATIONS

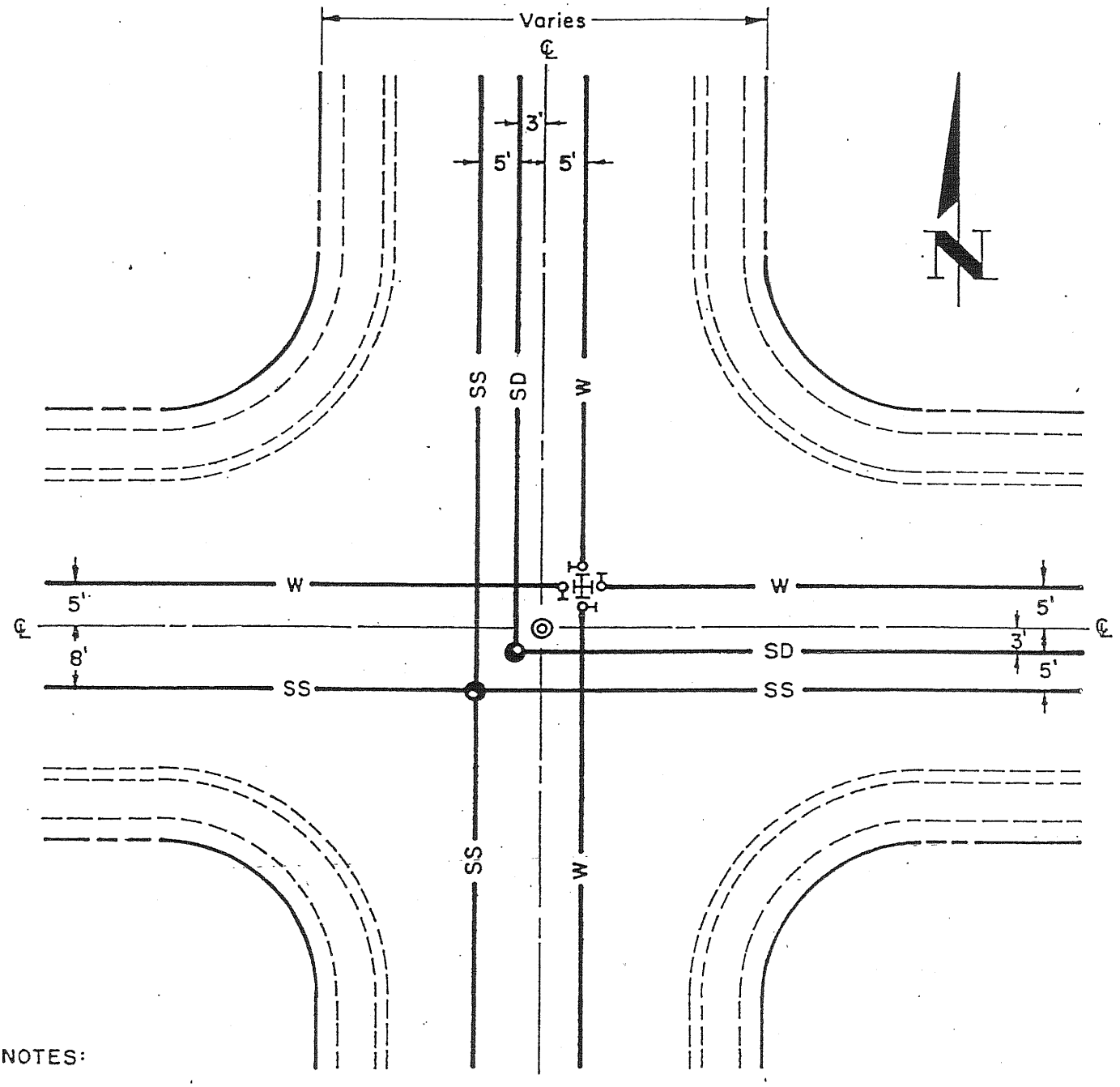

NOTES:

1. Location of utility shall be as follows
   Water "W" — 5' N of and 5' E of ℄
   Storm Drain "SD" — 3' S of and 3' W of ℄
   Sanitary Sewer "SS" — 8' S of and 8' W of ℄
2. Where utilities are to be installed in existing street the above standards may be modified with the approval of the City Engineer.

APPROVED BY

PUBLIC WORKS DIRECTOR

DATE 11-28-79

NO.	REVISION DATE	BY

STANDARD PLAN 605

City of Sonoma

PUBLIC WORKS DEPARTMENT

STANDARD STREET SIGN LOCATION

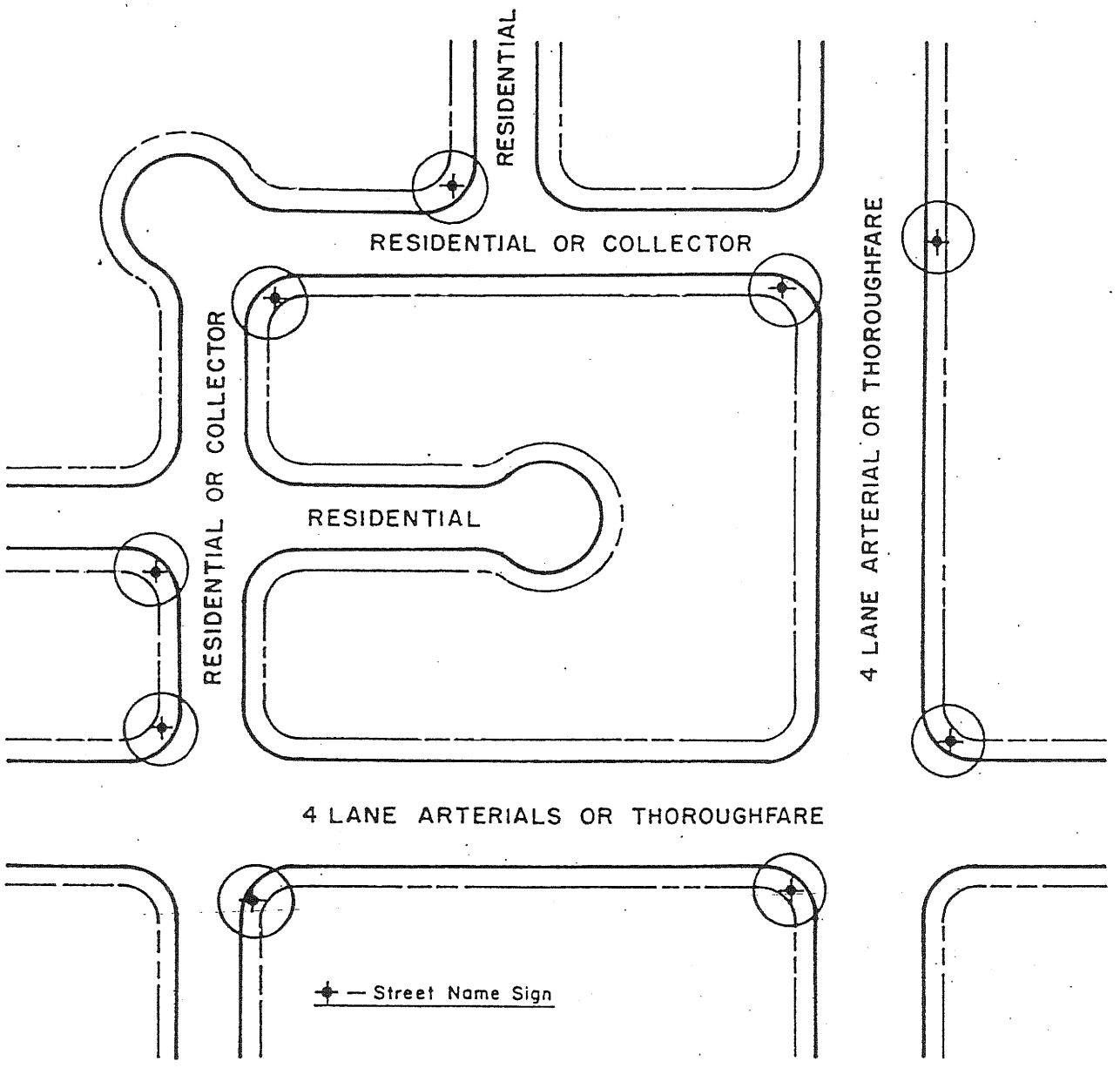

NOTES:

1. Place one (1) street sign at the intersection of two RESIDENTIALS.
2. Place two (2) street signs at the intersection of a RESIDENTIAL or COLLECTOR with a 4 LANE ARTERIAL or THOROUGHFARE.
3. Place two (2) street signs at the intersection of any 4 LANE ARTERIALS or THOROUGHFARES.

APPROVED BY

PUBLIC WORKS DIRECTOR

DATE

NO.	REVISION DATE	BY

STANDARD PLAN 606

DIST	COUNTY	ROUTE	KILOMETER POST TOTAL PROJECT	SHEET NO.	TOTAL SHEETS

Donald E. Howe
REGISTERED CIVIL ENGINEER

July 1, 2004
PLANS APPROVAL DATE

REGISTERED PROFESSIONAL ENGINEER Donald E. Howe No. C46402 Exp. 3-31-07 CIVIL STATE OF CALIFORNIA

The State of California or its officers or agents shall not be responsible for the accuracy or completeness of electronic copies of this plan sheet.

Obtain an authorized copy from the Caltrans Contract Plans Unit at http://www.dot.ca.gov

Caltrans Metric

CENTERLINES
(2 LANE HIGHWAYS)

DETAIL 1

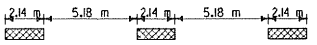

DETAIL 2

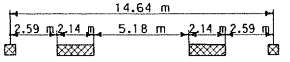

DETAIL 3

Detail 3 deleted

DETAIL 4

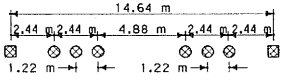

DETAIL 5

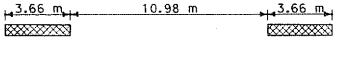

DETAIL 6

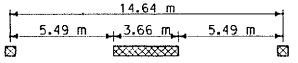

DETAIL 7

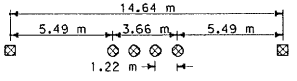

LANELINES
(MULTILANE HIGHWAYS)

DETAIL 8

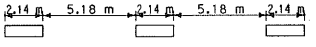

DETAIL 9

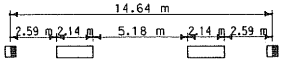

DETAIL 10

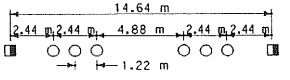

DETAIL 11

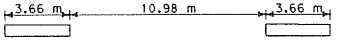

LANELINES (CONT)
(MULTILANE HIGHWAYS)

DETAIL 12

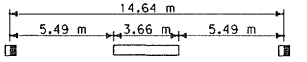

DETAIL 13

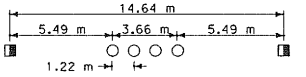

DETAIL 14

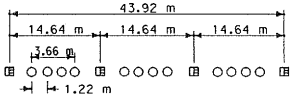

DETAIL 14A

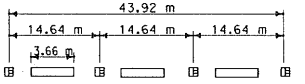

NO PASSING ZONES-ONE DIRECTION

DETAIL 15

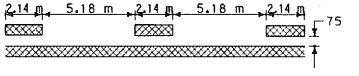

DETAIL 16

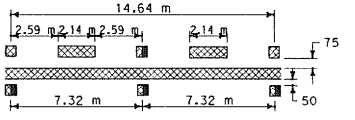

DETAIL 17

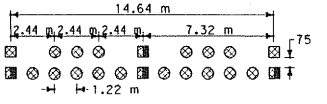

DETAIL 18

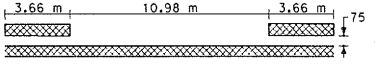

DETAIL 19

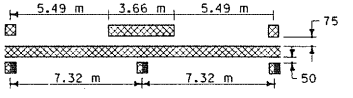

DETAIL 20

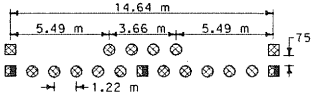

NO PASSING ZONES-TWO DIRECTION

DETAIL 21

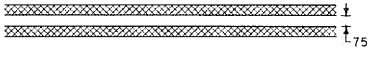

DETAIL 22

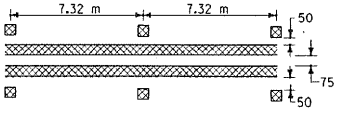

DETAIL 23

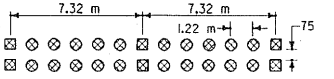

LEGEND

MARKERS

- TYPE A White Non-reflective
- TYPE AY Yellow Non-reflective
- TYPE C Red-clear Retroreflective
- TYPE D Two-way Yellow Retroreflective
- TYPE G One-way Clear Retroreflective
- TYPE H One-way Yellow Retroreflective

LINES

- 100 mm White
- 100 mm Yellow
- Direction of Travel

MARKER DETAILS

Retroreflective Face

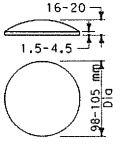

TYPE A & TYPE AY

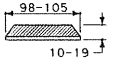

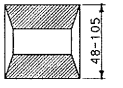

TYPE C & TYPE D

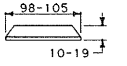

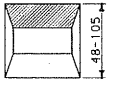

TYPE G & TYPE H

TYPICAL LANE LINE DELINEATION IN ADVANCE OF EXIT RAMP

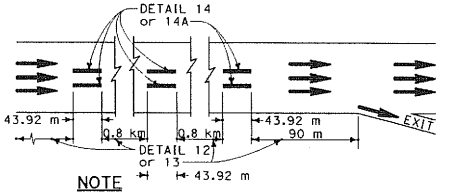

NOTE

Detail 14 is to be used in combination with Detail 13. Detail 14A is to be used in combination with Detail 12.

STATE OF CALIFORNIA
DEPARTMENT OF TRANSPORTATION

PAVEMENT MARKERS AND TRAFFIC LINES TYPICAL DETAILS

NO SCALE

ALL DIMENSIONS ARE IN MILLIMETERS UNLESS OTHERWISE SHOWN

A20A

2004 Std PLAN A20A

5

09-07-04

TYPE AY Yellow Non-reflective

TYPE D Two-way Yellow Retroreflective

TYPE H One-way Yellow Retroreflective

100 mm Yellow

Direction of Travel

Metric

Donald E. Howe
REGISTERED CIVIL ENGINEER

July 1, 2004
PLANS APPROVAL DATE

REGISTERED PROFESSIONAL ENGINEER Donald E. Howe No. C46402 Exp. 3-31-07 CIVIL STATE OF CALIFORNIA

The State of California or its officers or agents shall not be responsible for the accuracy or completeness of electronic copies of this plan sheet.

To get to the Caltrans web site, go to: http://www.dot.ca.gov

DETAIL 24

(DIVIDED HIGHWAYS)

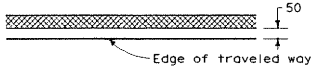

DETAIL 25

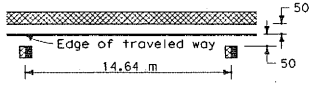

DETAIL 25A

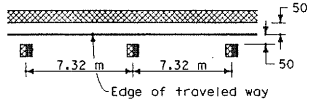

DETAIL 26

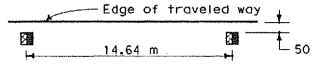

DETAIL 27

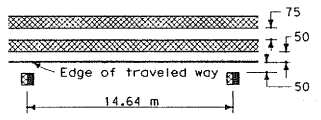

RIGHT EDGELINES

DETAIL 27A

Detail 27A deleted

DETAIL 27B

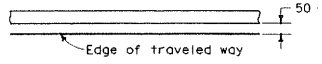

RIGHT EDGELINE EXTENSION THROUGH INTERSECTIONS

DETAIL 27C

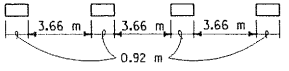

DETAIL 28

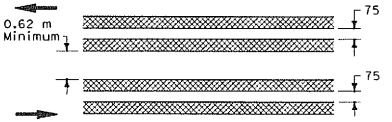

DETAIL 29

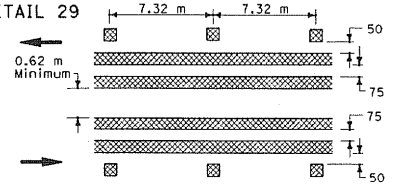

DETAIL 30

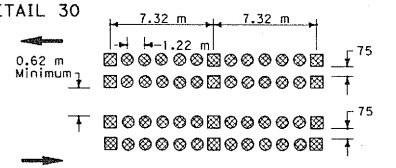

TWO-WAY LEFT TURN LANES

DETAIL 31

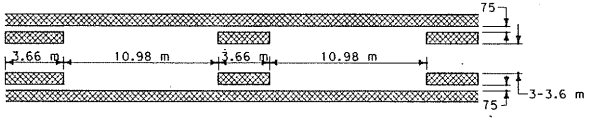

DETAIL 32

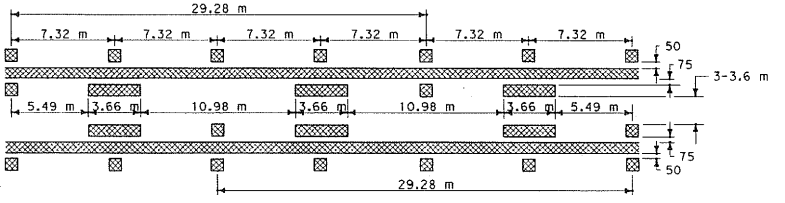

DETAIL 33

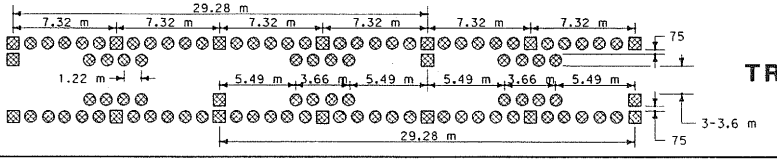

INTERSECTION TREATMENTS

DETAIL 34

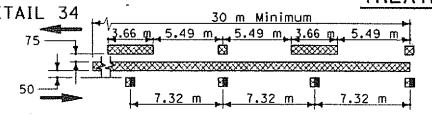

DETAIL 34A

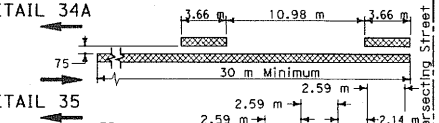

DETAIL 35

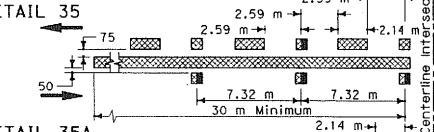

DETAIL 35A

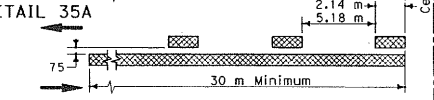

Centerline Intersecting Street

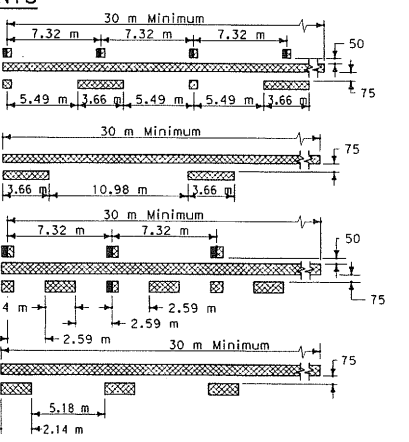

MARKER DETAILS

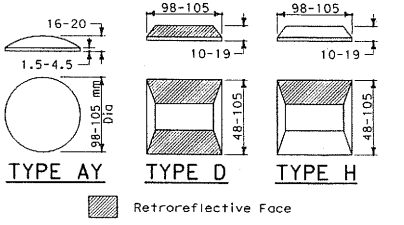

STATE OF CALIFORNIA
DEPARTMENT OF TRANSPORTATION

PAVEMENT MARKERS AND TRAFFIC LINES TYPICAL DETAILS

NO SCALE

ALL DIMENSIONS ARE IN MILLIMETERS UNLESS OTHERWISE SHOWN

A20B

2004 Std PLAN A20B

04-23-04

DETAIL 36

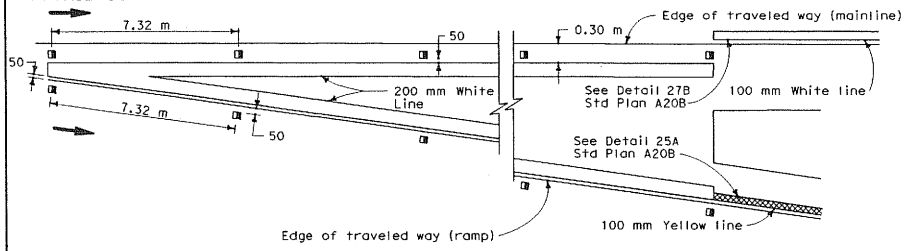

ENTRANCE RAMP NEUTRAL AREA (MERGE) TREATMENT

DETAIL 36A

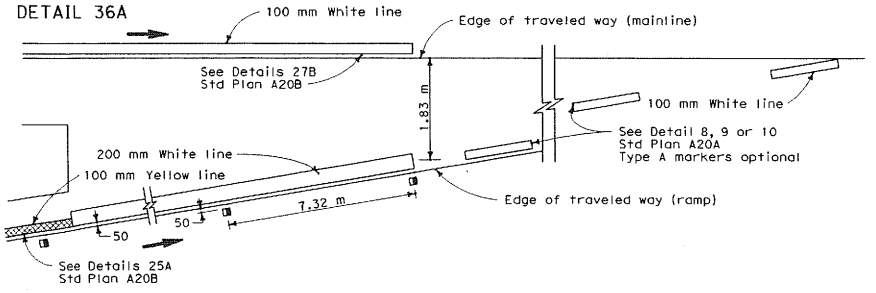

ENTRANCE RAMP NEUTRAL AREA (ACCELERATION LANE) TREATMENT

DETAIL 36B

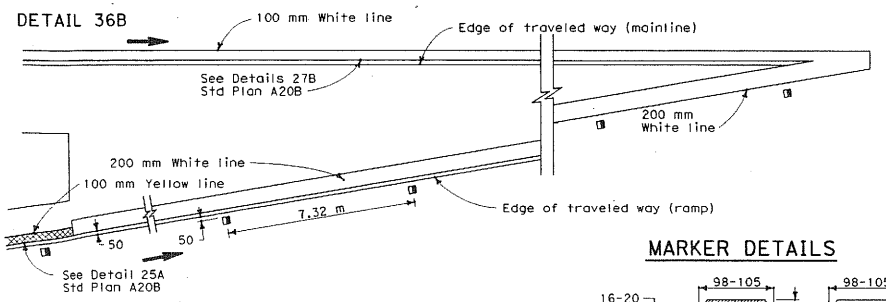

MARKER DETAILS

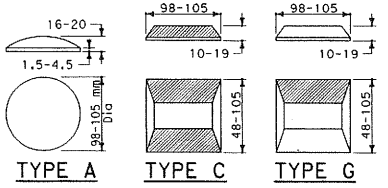

Retroreflective Face

LEGEND

MARKERS

- TYPE A White Non-reflective
- TYPE C Red-clear Retroreflective
- TYPE G One-way Clear Retroreflective
- Direction of Travel

Metric

Donald E. Howe
REGISTERED CIVIL ENGINEER

July 1, 2004
PLANS APPROVAL DATE

The State of California or its officers or agents shall not be responsible for the accuracy or completeness of electronic copies of this plan sheet.

REGISTERED PROFESSIONAL ENGINEER Donald E. Howe No. C46402 Exp. 3-31-07 CIVIL STATE OF CALIFORNIA

To get to the Caltrans web site, go to: http://www.dot.ca.gov

LANE DROP AT EXIT RAMPS

DETAIL 37

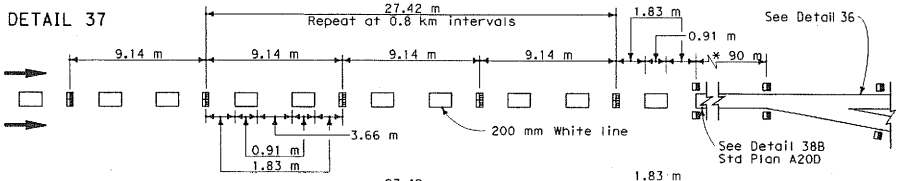

DETAIL 37A

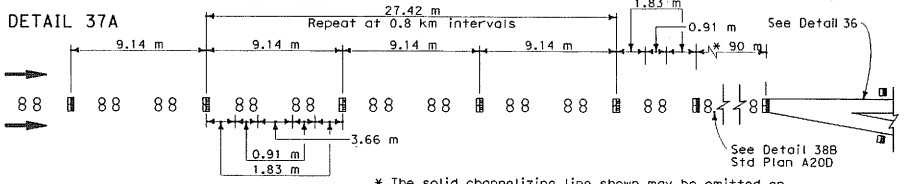

* The solid channelizing line shown may be omitted on short auxiliary lanes where weaving length is critical.

LANE DROP AT INTERSECTIONS

DETAIL 37B

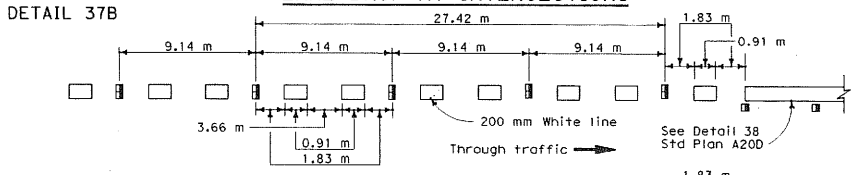

DETAIL 37C

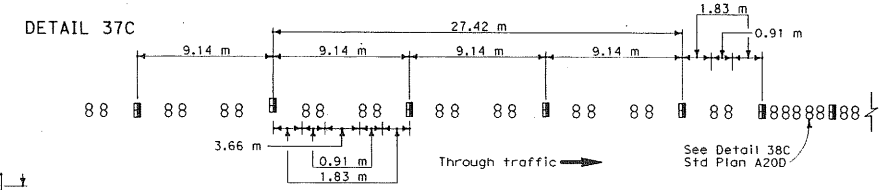

STATE OF CALIFORNIA
DEPARTMENT OF TRANSPORTATION

PAVEMENT MARKERS AND TRAFFIC LINE TYPICAL DETAILS

NO SCALE

ALL DIMENSIONS ARE IN MILLIMETERS UNLESS OTHERWISE SHOWN

A20C

2004 Std PLAN A20C

04-23-04

DETAIL 38

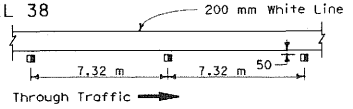

DETAIL 38A

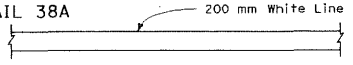

DETAIL 38B

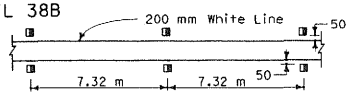

DETAIL 38C

BIKE LANE LINE

DETAIL 39

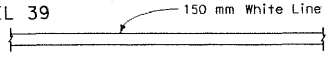

INTERSECTION LINE
BIKE LANE

DETAIL 39A

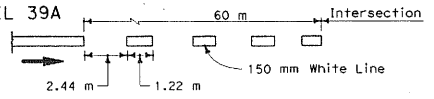

MARKERS

- TYPE A White Non-reflective
- TYPE AY Yellow Non-Reflective
- TYPE G One-way Clear Retroreflective
- 100 mm Yellow Line
- Direction of Travel

MARKER DETAILS

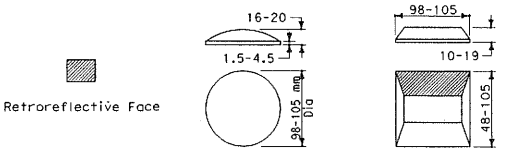

TYPE A & TYPE AY

TYPE G

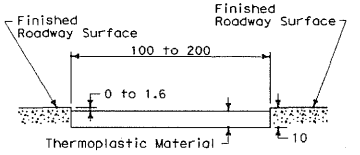

DETAIL FOR RECESSED THERMOPLASTIC TRAFFIC STRIPE

See Notes A and B.

RECESSED THERMOPLASTIC NOTES

A. See typical traffic line details for pavement marking patterns.

B. The top of the thermoplastic installed in recessed pavement shall be 0 to 1.6 mm below the pavement surface.

LANE LINE EXTENSIONS THROUGH INTERSECTIONS

DETAIL 40

DETAIL 40A

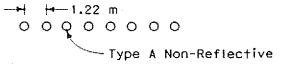

CENTER LINE EXTENSIONS THROUGH INTERSECTIONS

DETAIL 41

DETAIL 41A

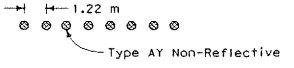

Metric

REGISTERED CIVIL ENGINEER

July 1, 2004
PLANS APPROVAL DATE

The State of California or its officers or agents shall not be responsible for the accuracy or completeness of electronic copies of this plan sheet.

REGISTERED PROFESSIONAL ENGINEER Donald E. Howe C46402 Exp. 3-31-07 CIVIL STATE OF CALIFORNIA

To get to the Caltrans web site, go to: http://www.dot.ca.gov

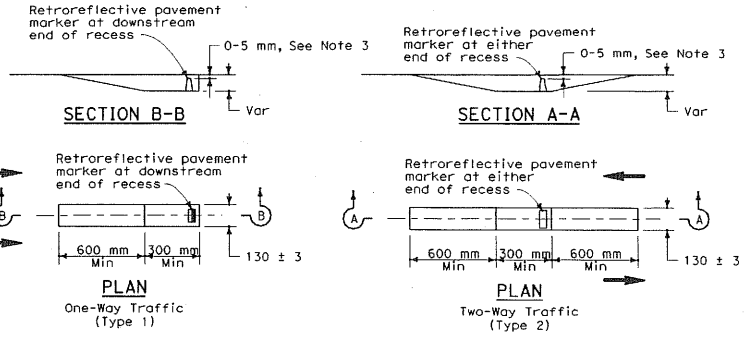

RECESS DETAIL FOR RETROREFLECTIVE PAVEMENT MARKER

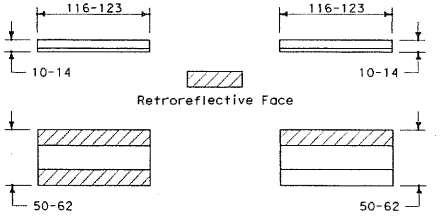

TYPE C & TYPE D

TYPE G & TYPE H

See Notes 1 and 2.

RETROREFLECTIVE PAVEMENT MARKER FOR RECESSED INSTALLATION

RECESSED MARKER NOTES

1. See typical traffic line details for marker patterns to be used with recessed pavement markers. Detail 14 requires a Type 2 recess.
2. The retroreflective pavement markers shown for recessed installations are not to be used for non-recessed installations.
3. The top of pavement markers installed in recesses shall be 0-5 mm below the pavement surface.

STATE OF CALIFORNIA
DEPARTMENT OF TRANSPORTATION

PAVEMENT MARKERS AND TRAFFIC LINES TYPICAL DETAILS

NO SCALE

ALL DIMENSIONS ARE IN MILLIMETERS UNLESS OTHERWISE SHOWN

A20D

2004 Std PLAN A20D

04-23-04

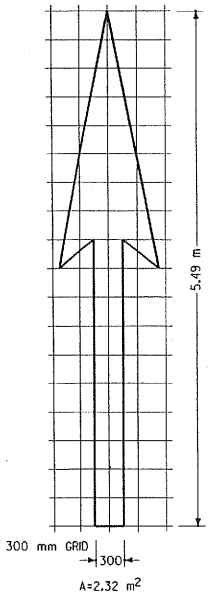

TYPE I(5.49 m) ARROW

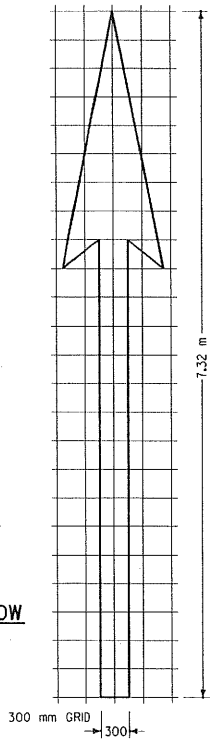

TYPE I(7.32 m) ARROW

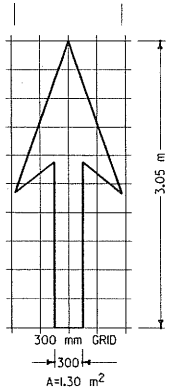

TYPE I(3.05 m) ARROW

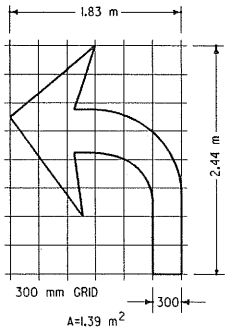

TYPE IV (L) ARROW

(FOR TYPE IV(R) ARROW, USE MIRROR IMAGE)

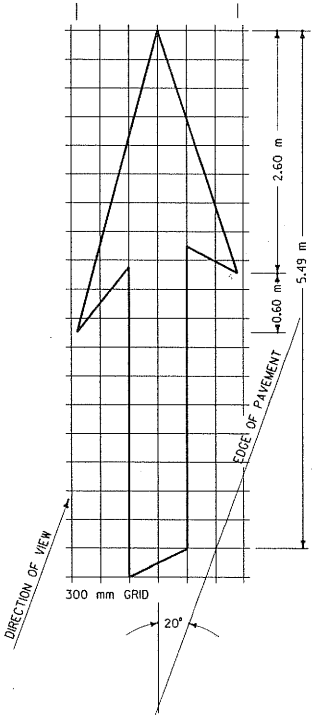

TYPE VI ARROW

RIGHT LANE DROP ARROW (FOR LEFT LANE, USE MIRROR IMAGE)

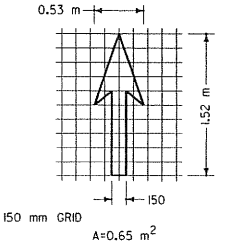

BIKE LANE ARROW

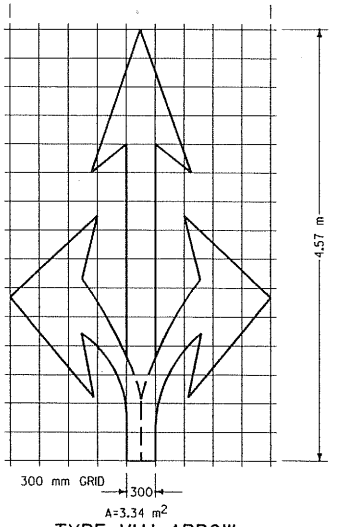

TYPE VIII ARROW

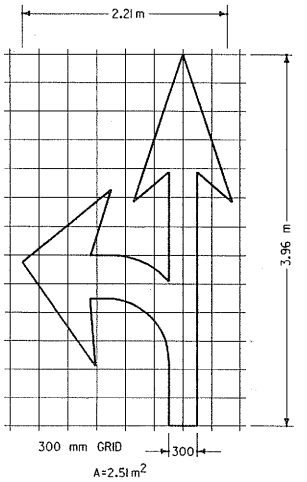

TYPE VII(L) ARROW

(FOR TYPE VII(R) ARROW, USE MIRROR IMAGE)

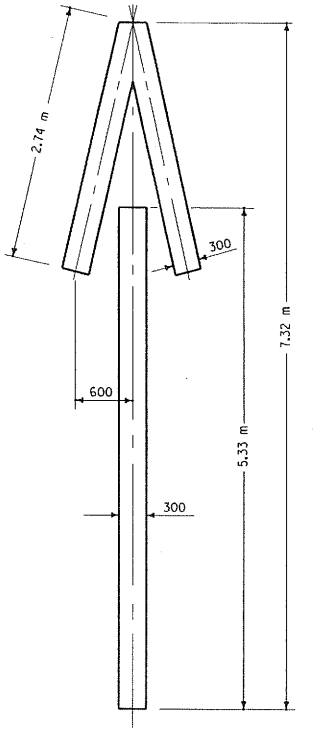

TYPE V ARROW

NOTE

MINOR VARIATIONS IN DIMENSIONS MAY BE ACCEPTED BY THE ENGINEER.

Metric

REGISTERED CIVIL ENGINEER

July 1, 2004

PLANS APPROVAL DATE

The State of California or its officers or agents shall not be responsible for the accuracy or completeness of electronic copies of this plan sheet.

REGISTERED PROFESSIONAL ENGINEER Donald E. Howe No. C46402 Exp. 3-31-07 CIVIL STATE OF CALIFORNIA

To get to the Caltrans web site, go to: http://www.dot.ca.gov

STATE OF CALIFORNIA
DEPARTMENT OF TRANSPORTATION

PAVEMENT MARKINGS ARROWS

NO SCALE

ALL DIMENSIONS ARE IN MILLIMETERS UNLESS OTHERWISE SHOWN

A24A

2004 Std PLAN A24A

04-23-04

DIST	COUNTY	ROUTE	KILOMETER POST TOTAL PROJECT	SHEET NO.	TOTAL SHEETS

Caltrans Metric

Donald E. Howe
REGISTERED CIVIL ENGINEER

July 1, 2004
PLANS APPROVAL DATE

REGISTERED PROFESSIONAL ENGINEER
Donald E. Howe
No. C46402
Exp. 3-31-07
CIVIL
STATE OF CALIFORNIA

The State of California or its officers or agents shall not be responsible for the accuracy or completeness of electronic copies of this plan sheet.

To get to the Caltrans web site, go to: http://www.dot.ca.gov

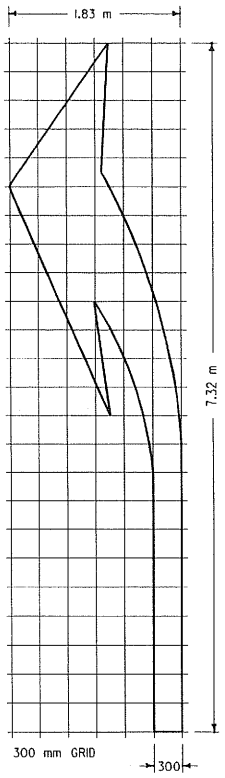

A=3.90 m^2

TYPE III(L) ARROW
(FOR TYPE III(R) USE MIRROR IMAGE)

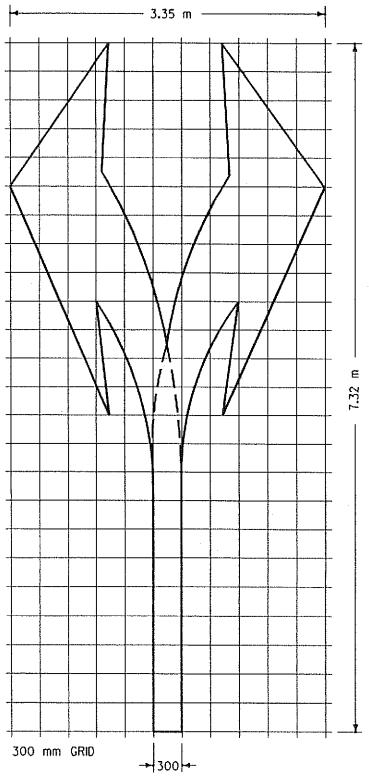

A=6.78 m^2

TYPE III(B) ARROW

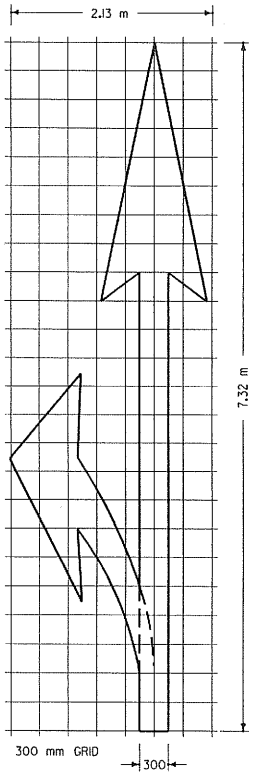

A=4.18 m^2

TYPE II(L) ARROW
(FOR TYPE II(R) USE MIRROR IMAGE)

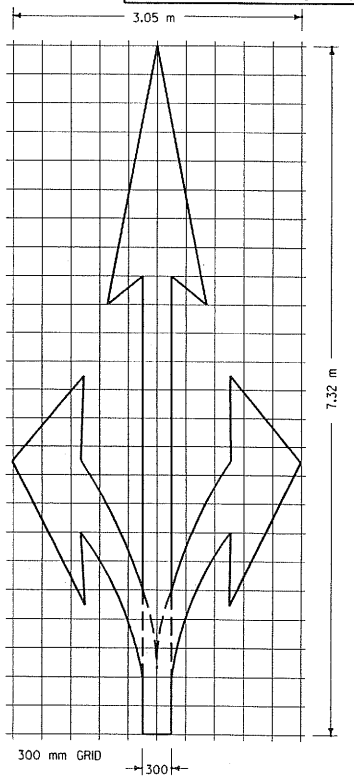

A=5.48 m^2

TYPE II(B) ARROW

NOTE

MINOR VARIATIONS IN DIMENSIONS MAY BE ACCEPTED BY THE ENGINEER.

STATE OF CALIFORNIA
DEPARTMENT OF TRANSPORTATION

PAVEMENT MARKINGS ARROWS

NO SCALE

ALL DIMENSIONS ARE IN MILLIMETERS UNLESS OTHERWISE SHOWN

A24B

2004 Std PLAN A24B

04-23-04

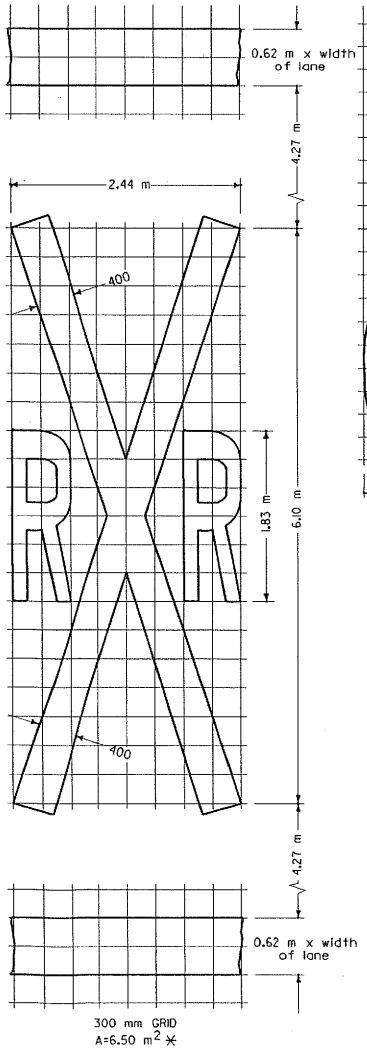

RAILROAD CROSSING SYMBOL

✳6.5 m² DOES NOT INCLUDE THE 0.6 m x VARIABLE WIDTH TRANSVERSE LINES.

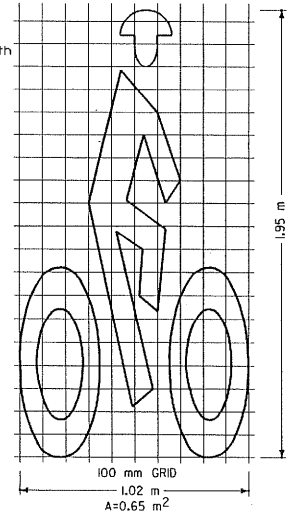

BIKE LANE SYMBOL

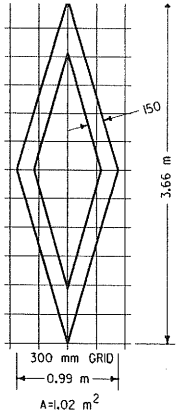

DIAMOND SYMBOL

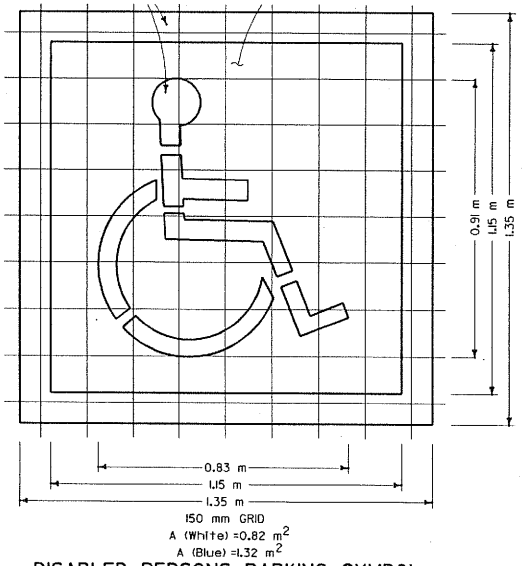

DISABLED PERSONS PARKING SYMBOL

See Note 2

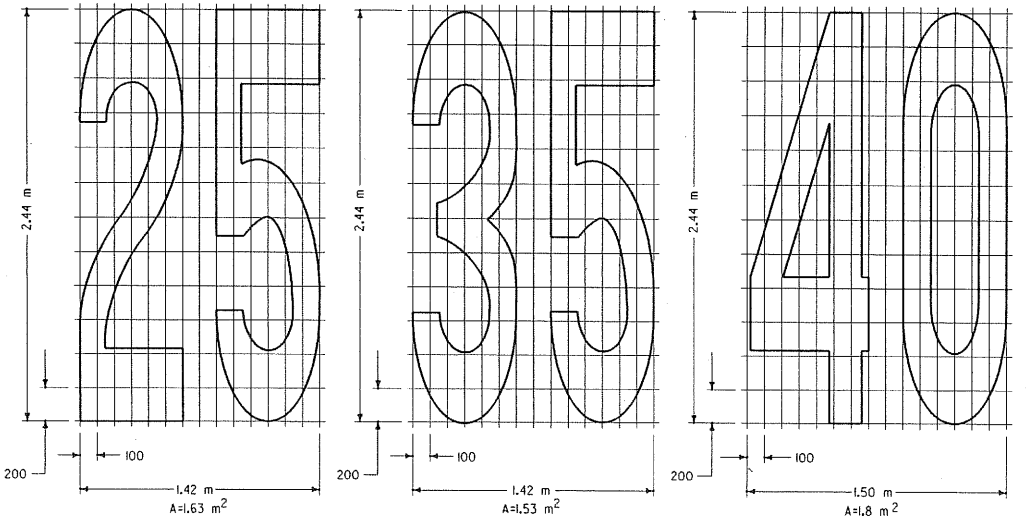

NUMERALS

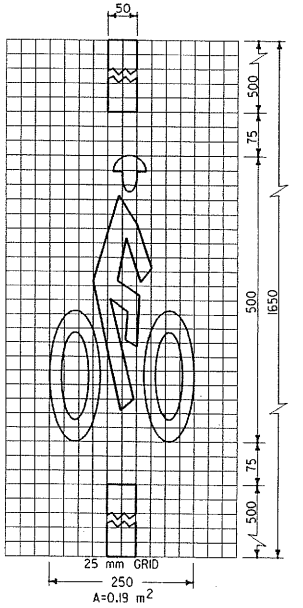

BICYCLE LOOP DETECTOR SYMBOL

NOTES

1. Minor variations in dimensions may be accepted by the Engineer.
2. This parking symbol is also known as the International Symbol of Accessibility (ISA)

Metric

Donald E. Howe
REGISTERED CIVIL ENGINEER

July 1, 2004
PLANS APPROVAL DATE

REGISTERED PROFESSIONAL ENGINEER Donald E. Howe No. C46402 Exp. 3-31-07 CIVIL STATE OF CALIFORNIA

The State of California or its officers or agents shall not be responsible for the accuracy or completeness of electronic copies of this plan sheet.

To get to the Caltrans web site, go to: http://www.dot.ca.gov

STATE OF CALIFORNIA
DEPARTMENT OF TRANSPORTATION

PAVEMENT MARKINGS SYMBOLS AND NUMERALS

NO SCALE

ALL DIMENSIONS ARE IN MILLIMETERS UNLESS OTHERWISE SHOWN

A24C

2004 Std PLAN A24C

04-23-04

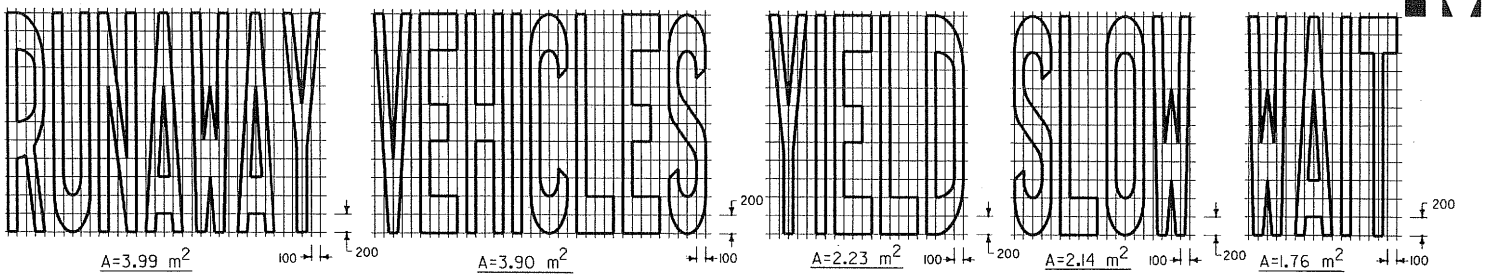

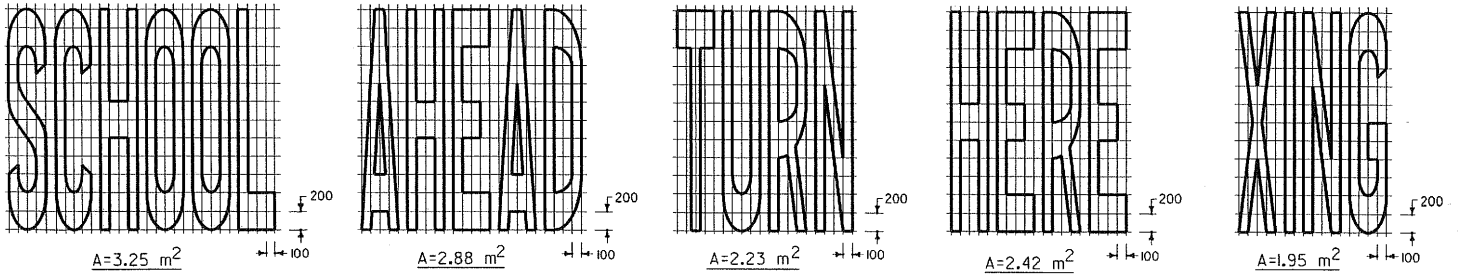

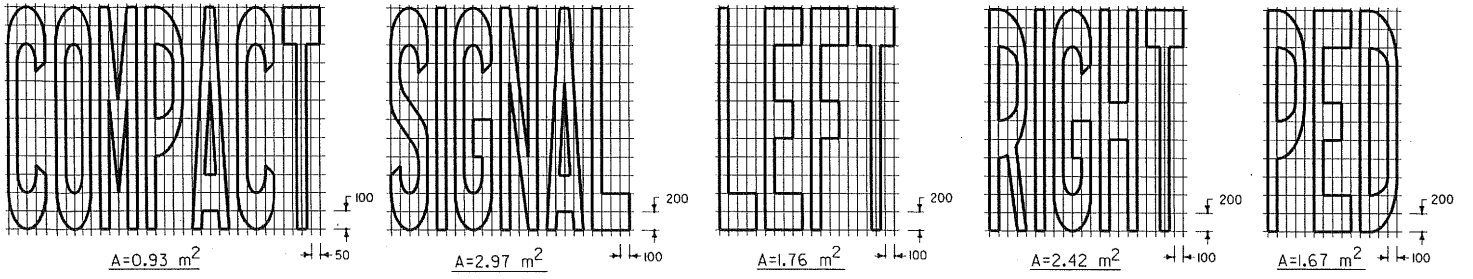

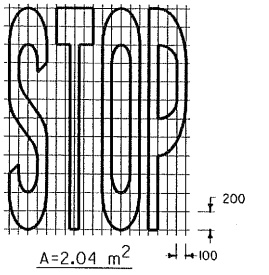

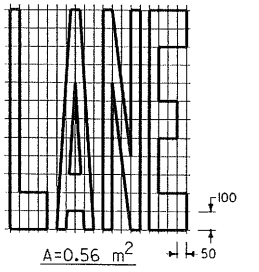

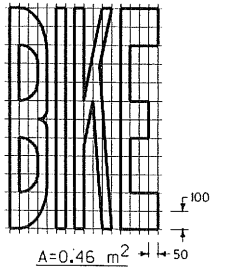

Metric

Donald E. Howe
REGISTERED CIVIL ENGINEER

July 1, 2004
PLANS APPROVAL DATE

REGISTERED PROFESSIONAL ENGINEER
Donald E. Howe
No. C46402
Exp. 3-31-07
CIVIL
STATE OF CALIFORNIA

The State of California or its officers or agents shall not be responsible for the accuracy or completeness of electronic copies of this plan sheet.

To get to the Caltrans web site, go to: http://www.dot.ca.gov

NOTES

(1) If a message consists of more than one word, it should read "UP", i.e., the first word should be nearest the driver.

(2) The space between words should be at least four times the height of the characters for low speed roads, but not more than ten times the height of the characters. The space may be reduced appropriately where there is limited space because of local conditions.

(3) Minor variations in dimensions may be accepted by the Engineer.

(4) Portions of a letter, number or symbol may be separated by connecting segments not to exceed 50 mm in width.

WORD MARKINGS

ITEM	m^2	ITEM	m^2	ITEM	m^2	ITEM	m^2
XING	1.95	YIELD	2.23	BIKE	0.46	PED	1.67
AHEAD	2.88	SCHOOL	3.25	SLOW	2.14	COMPACT	0.93
WAIT	1.76	SIGNAL	2.97	STOP	2.04	RUNAWAY	3.99
LANE	0.56	TURN	2.23	LEFT	1.76	VEHICLES	3.90
RIGHT	2.42	HERE	2.42				

STATE OF CALIFORNIA
DEPARTMENT OF TRANSPORTATION

PAVEMENT MARKINGS WORDS

NO SCALE

ALL DIMENSIONS ARE IN MILLIMETERS UNLESS OTHERWISE SHOWN

A24D

04-23-04

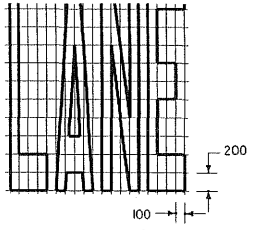

A=2.23 m²

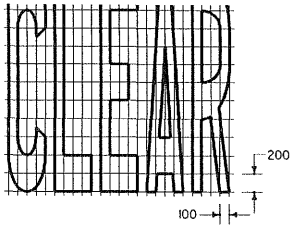

A=2.51 m²

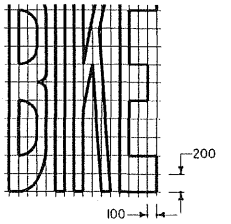

A=1.95 m²

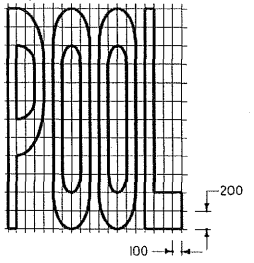

A=2.14 m²

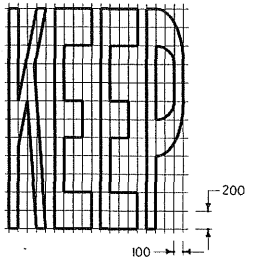

A=2.23 m²

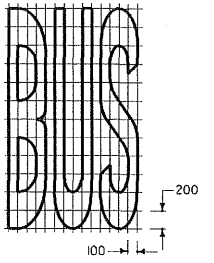

A=1.86 m²

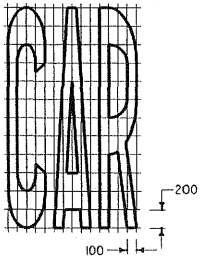

A=1.58 m²

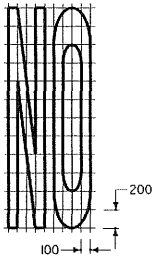

A=1.30 m²

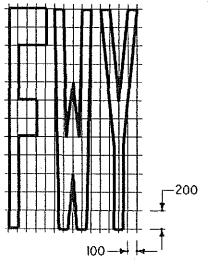

A=1.49 m²

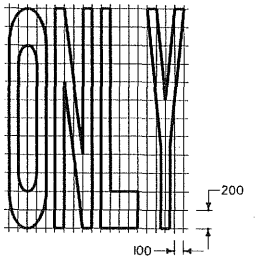

A=2.04 m²

CROSSWALK AND LIMIT LINE

See Note 5

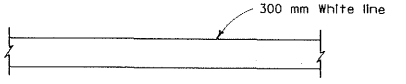

YIELD LINE

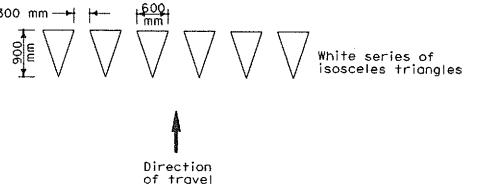

A=0.21 m²

See Notes 6 and 7

NOTES

1. If a message consists of more than one word, it should read "UP", i.e., the first word should be nearest the driver.
2. The space between words should be at least four times the height of the characters for low speed roads, but not more than ten times the height of the characters. The space may be reduced appropriately where there is limited space because of local conditions.
3. Minor variations in dimensions may be accepted by the Engineer.
4. Portions of a letter, number or symbol may be separated by connecting segments not to exceed 50 mm in width.
5. Crosswalks contiguous to school grounds are to be 300 mm yellow lines in place of 300 mm white shown.
6. The words "NO PARKING" pavement marking is to be used for parking facilities. For typical locations of markings, see Standard Plans A90A and A90B.
7. The words "NO PARKING", shall be painted in white letters no less than 300 mm high on a contrasting background and located so that it is visible to traffic enforcement officials.

WORD MARKINGS			
ITEM	m²	ITEM	m²
LANE	2.23	NO	1.30
POOL	2.14	BIKE	1.95
CAR	1.58	BUS	1.86
CLEAR	2.51	ONLY	2.04
KEEP	2.23	FWY	1.49

Metric

REGISTERED CIVIL ENGINEER

July 1, 2004

PLANS APPROVAL DATE

REGISTERED PROFESSIONAL ENGINEER Donald E. Howe No. C46402 Exp. 3-31-07 CIVIL STATE OF CALIFORNIA

The State of California or its officers or agents shall not be responsible for the accuracy or completeness of electronic copies of this plan sheet.

To get to the Caltrans web site, go to: http://www.dot.ca.gov

STATE OF CALIFORNIA
DEPARTMENT OF TRANSPORTATION

PAVEMENT MARKINGS WORDS AND CROSSWALKS

NO SCALE

ALL DIMENSIONS ARE IN MILLIMETERS UNLESS OTHERWISE SHOWN

A24E

06-08-04

2004 Std PLAN A24E

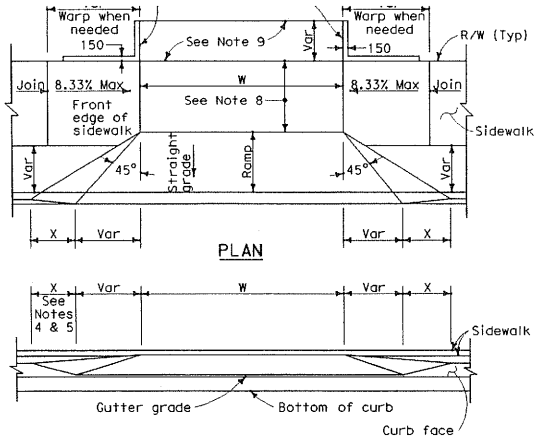

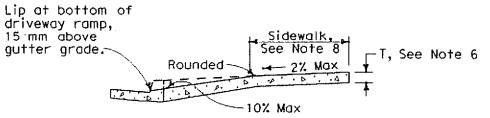

CASE A

Typical driveway, sidewalk not depressed

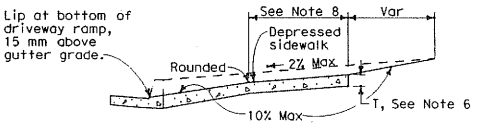

CASE B

Driveway with depressed sidewalk

SECTIONS

DRIVEWAYS

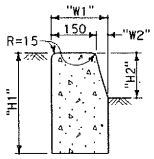

TYPE A1 CURBS

See Table A

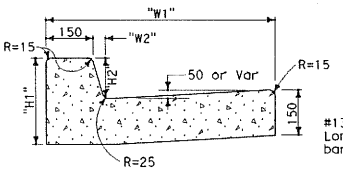

TYPE A2 CURBS

See Table A

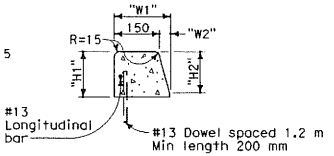

TYPE A3 CURBS

Superimposed on existing pavement
See Table A

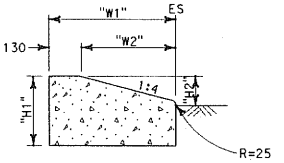

TYPE D CURBS

See Table A

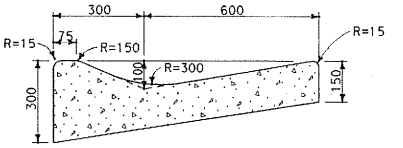

TYPE E CURB

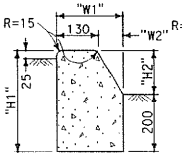

TYPE B1 CURBS

See Table A

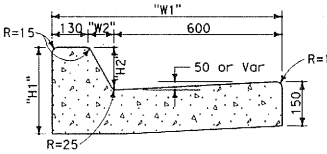

TYPE B2 CURBS

See Table A

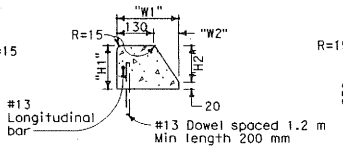

TYPE B3 CURBS

Superimposed on existing pavement
See Table A

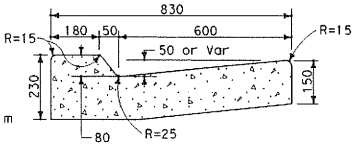

TYPE B4 CURBS

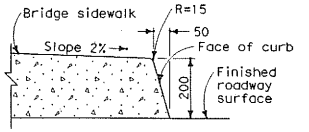

TYPE H CURB

On Bridges

CURBS

NOTES

1. Case A driveway section typically applies.
2. Use Case B driveway section when ramp slopes would exceed 10% in Case A.
3. Use Case B driveway section when sidewalk cross slope would exceed 2% in Case A.
4. X=900 mm except for curb heights over 250 mm where 1:4 slopes shall be used on curb slope.
5. X is a variable when sidewalk is located where wheelchairs may traverse the surface. Slopes shall not exceed 8.33%.
6. Sidewalk and ramp thickness ``T'' at driveway shall be 100 mm for residental and 150 mm for commercial.
7. Difference in slope of the driveway ramp and the slope of a line between the gutter and a point on the roadway 1.5 meters from gutter line shall not exceed 15%. Reduce driveway ramp slope, not gutter slope, where required.
8. Minimum width of clear passageway for sidewalk shall be 1.22 meters. Where right of way restrictions, natural barriers or other existing conditions create an unreasonable hardship, the clear passageway width may be reduced to 915 mm
9. Retaining curbs and acquisition of construction easement may be necessary for narrow sidewalks or curb heights in excess of 150 mm.

Metric

REGISTERED CIVIL ENGINEER

July 1, 2004

PLANS APPROVAL DATE

REGISTERED PROFESSIONAL ENGINEER Michael Jonzen NO. 44768 EXP. 03-31-06 CIVIL STATE OF CALIFORNIA

The State of California or its officers or agents shall not be responsible for the accuracy or completeness of electronic copies of this plan sheet.

To get to the Caltrans web site, go to: http://www.dot.ca.gov

CURB QUANTITIES

TYPE	CUBIC METERS PER METER
A1-150	0.064
A1-200	0.075
A2-150	0.144
A2-200	0.155
A3-150	0.025
A3-200	0.035
B1-100	0.056
B1-150	0.073
B2-100	0.137
B2-150	0.152
B3-100	0.017
B3-150	0.027
B4	0.142
D-100	0.100
D-150	0.162
E	0.161

TABLE A

CURB TYPE	DIMENSIONS "H1"	"H2"	"W1"	"W2"
A1-150	350	150	190	40
A1-200	400	200	200	50
A2-150	300	150	790	40
A2-200	350	200	800	50
A3-150	150	130	185	35
A3-200	200	180	198	48
B1-100	300	100	200	70
B1-150	350	150	230	100
B2-100	250	100	800	70
B2-150	300	150	830	100
B3-100	100	80	185	55
B3-150	150	130	217	87
D-100	250	100	452	322
D-150	300	150	652	522

STATE OF CALIFORNIA
DEPARTMENT OF TRANSPORTATION

CURBS AND DRIVEWAYS

NO SCALE

ALL DIMENSIONS ARE IN MILLIMETERS UNLESS OTHERWISE SHOWN

A87A

2004 Std PLAN A87A

05-04-04

REGISTERED CIVIL ENGINEER

July 1, 2004
PLANS APPROVAL DATE

The State of California or its officers or agents shall not be responsible for the accuracy or completeness of electronic copies of this plan sheet.

To get to the Caltrans web site, go to: http://www.dot.ca.gov

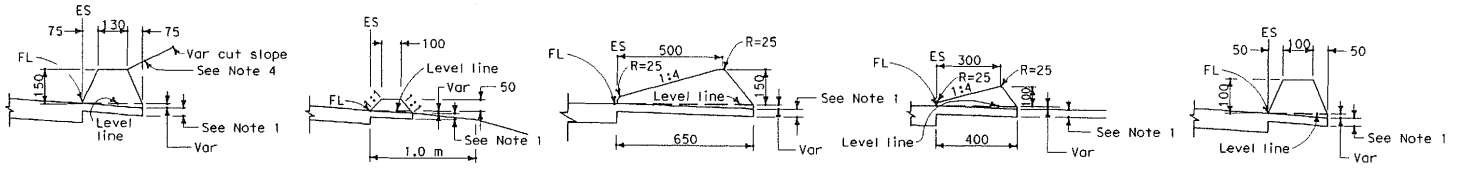

TYPE A
See Note 3

TYPE C

TYPE D

TYPE E

TYPE F
See Note 5

DIKES

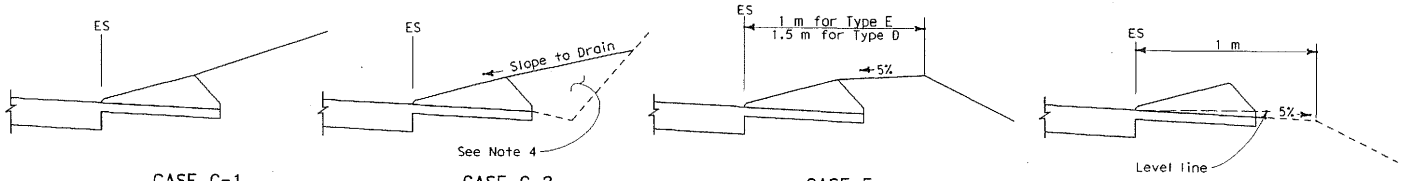

CASE C-1
Cut Slope

CASE C-2
Cut Slope

CASE F

CASE R
See Note 2

TYPE D AND E BACKFILL DETAILS

NOTES

1. For AC shoulders only, extend top layer of AC placed on the shoulder under dike with no joint at the ES.
2. Case R applies to retrofit only projects where restrictive conditions do not provide enough width for Case F backfill.
3. Type A dike only to be used where restrictive slope conditions do not provide enough width to use Type D or Type E dike.
4. Fill and compact with excavated material to top of dike.
5. Use Type F dike, where dike is required with guard railing installations. See Standard Plan A77F for dike positioning details.
6. Type B dike deleted.

DIKE QUANTITIES

TYPE	CUBIC METERS PER METER
A	0.033
C	0.009
D	0.065
E	0.027
F	0.016

Quantities based on 5% cross slope.

STATE OF CALIFORNIA
DEPARTMENT OF TRANSPORTATION

ASPHALT CONCRETE DIKES

NO SCALE

ALL DIMENSIONS ARE IN MILLIMETERS UNLESS OTHERWISE SHOWN

A87B

2004 Std PLAN A87B

05-04-04

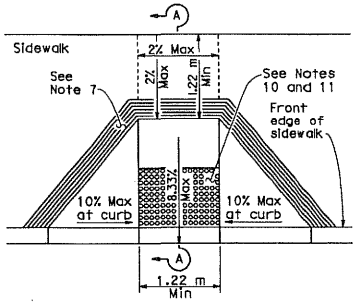

CASE A

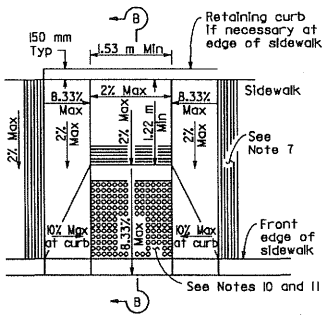

CASE B

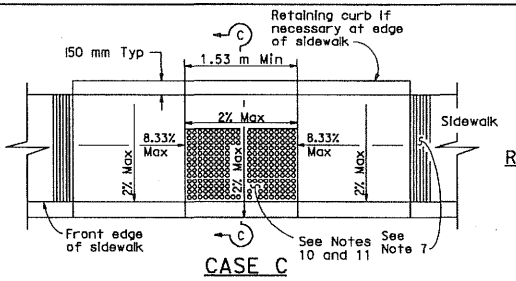

CASE C

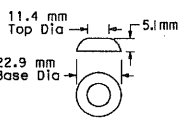

RAISED TRUNCATED DOME

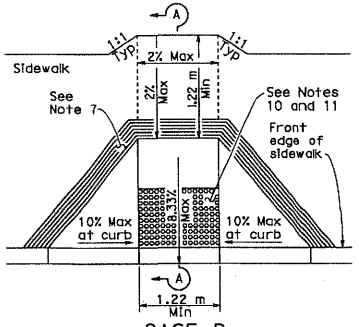

CASE D

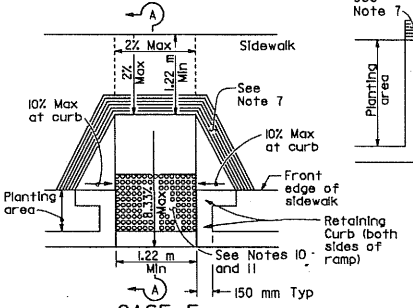

CASE E

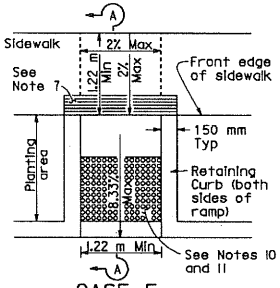

CASE F

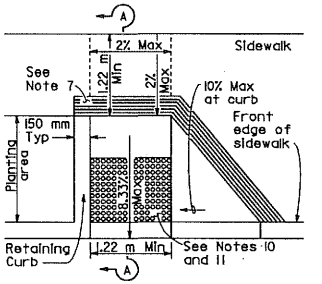

CASE G

See Note 4

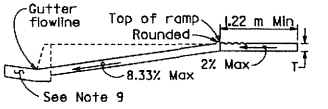

SECTION A-A

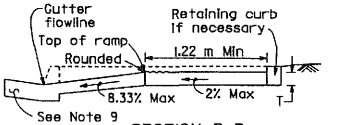

SECTION B-B

Depress entire sidewalk as required

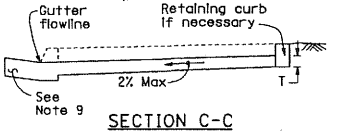

SECTION C-C

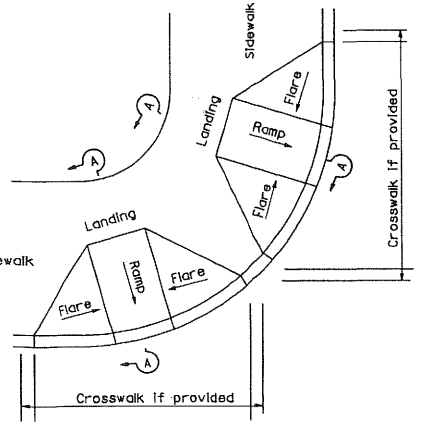

DETAIL A

TYPICAL TWO-RAMP CORNER INSTALLATION

See Note 1

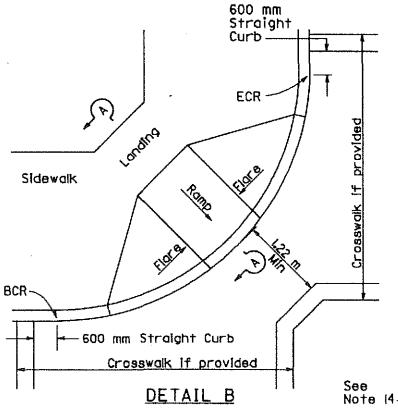

DETAIL B

TYPICAL ONE-RAMP CORNER INSTALLATION

See Notes 1 and 3

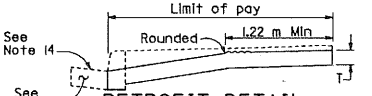

RETROFIT DETAIL

Existing curb and sidewalk

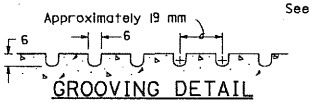

GROOVING DETAIL

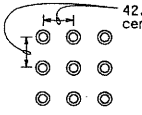

RAISED TRUNCATED DOME PATTERN (IN-LINE)

DETECTABLE WARNING SURFACE

See Note 10

Caltrans Metric

DIST	COUNTY	ROUTE	KILOMETER POST TOTAL PROJECT	SHEET NO.	TOTAL SHEETS

REGISTERED CIVIL ENGINEER

December 16, 2005

PLANS APPROVAL DATE

Hector David Cordova No. C41957 Exp. 3-31-06 CIVIL STATE OF CALIFORNIA

The State of California or its officers or agents shall not be responsible for the accuracy or completeness of electronic copies of this plan sheet.

To get to the Caltrans web site, go to: http://www.dot.ca.gov

NOTES

1. As site conditions dictate, Case A through Case G curb ramps may be used for corner installations similar to those shown in Detail A and Detail B. The case of curb ramps used in Detail A do not have to be the same. Case A through Case G curb ramps also may be used at mid block locations, as site conditions dictate. For Cases B and C, the side of the curb ramp should always be perpendicular to curb face.
2. If distance from curb to back of sidewalk is too short to accommodate ramp and 1.22 m platform (landing) as shown in Case A, the sidewalk may be depressed longitudinally as in Case B, or C or may be widened as in Case D.
3. When ramp is located in center of curb return, crosswalk configuration must be similar to that shown for Detail B.
4. As site conditions dictate, the retaining curb side and the flared side of the Case G ramp shall be constructed in reversed position.
5. If located on a curve, the sides of the ramp need not be parallel, but the minimum width of the ramp shall be 1.22 m.
6. Side slope of ramp flares vary uniformly from a maximum of 10% at curb to conform with longitudinal sidewalk slope adjacent to top of the ramp, except in Case C and Case F.
7. The curb ramp shall be outlined, as shown, with a 305 mm wide border with 6 mm grooves approximately 19 mm on center. See grooving detail.
8. Transitions from ramps and landings to walks, gutters or streets shall be flush and free of abrupt changes.
9. Maximum slopes of adjoining gutters, the road surface immediately adjacent to the curb ramp, or accessible route shall not exceed 5 percent within 1.22 m of the top and bottom of the curb ramp.
10. Curb ramps shall have a detectable warning surface that extends the full width and 914 mm depth of the ramp. Detectable Warning Surfaces shall conform to the details on this plan and the requirements in the Special Provisions.
11. The edge of the detectable warning surface nearest the street shall be between 150 mm and 205 mm from the gutter flowline.
12. Sidewalk and ramp thickness, "T", shall be 90 mm minimum.
13. Utility pull boxes, manholes, vaults and all other utility facilities within the boundaries of the curb ramp will be relocated or adjusted to grade by the owner prior to, or in conjunction with, curb ramp construction.
14. For retrofit conditions, removal and replacement of curb apron will be at the Contractor's option, unless otherwise shown on project plans.

STATE OF CALIFORNIA
DEPARTMENT OF TRANSPORTATION

CURB RAMP DETAILS

NO SCALE

ALL DIMENSIONS ARE IN MILLIMETERS UNLESS OTHERWISE SHOWN

RSP A88A DATED DECEMBER 16, 2005 SUPERSEDES STANDARD PLAN A88A DATED JULY 1, 2004-PAGE 117 OF THE STANDARD PLANS BOOK DATED JULY 2004.

REVISED STANDARD PLAN RSP A88A

12-16-05

2004 REVISED Std PLAN RSP A88A

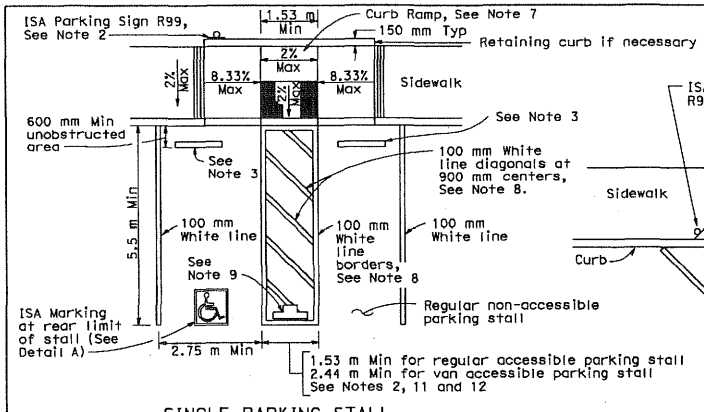

SINGLE PARKING STALL

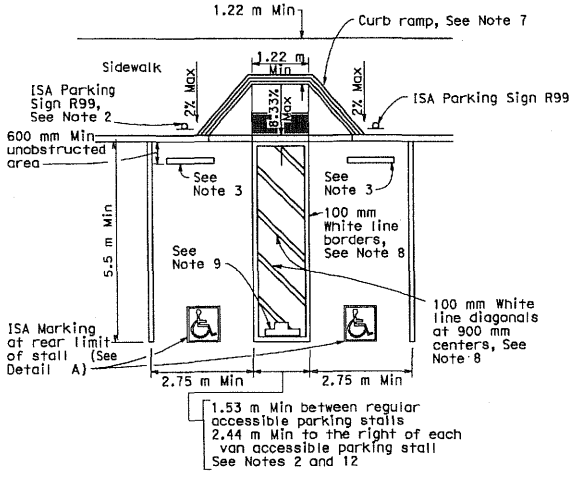

DOUBLE PARKING STALL

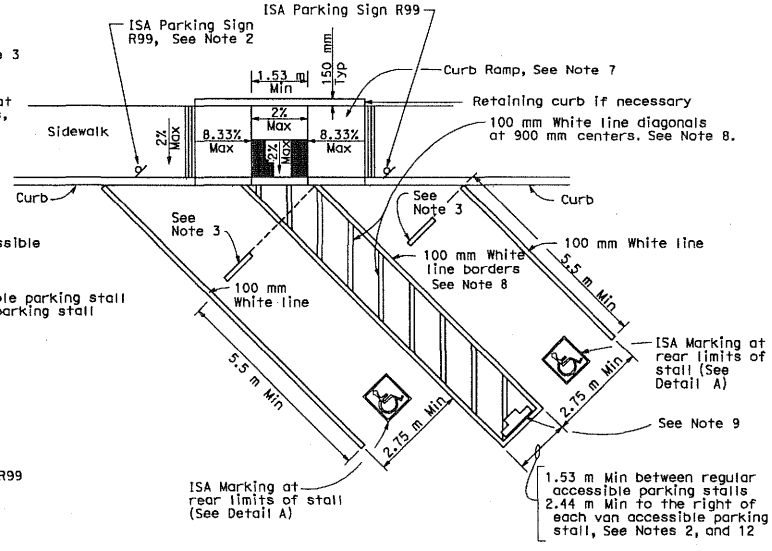

DIAGONAL DOUBLE PARKING STALLS

TABLE A

Total Number of Parking Spaces or Stalls	Minimum Number of Disabled Accessible Parking Spaces or Stalls
1-25	1
26-50	2
51-75	3
76-100	4
101-150	5
151-200	6
201-300	7
301-400	8
401-500	9
501-1000	2 percent of total
Greater than 1001	20 plus 1 for each 100 or fraction thereof over 1001

VAN ACCESSIBLE SIGN (R99A)
Standard 300 mm x 200 mm
See Notes 2 and 6

ISA PARKING SIGN (R99)
Standard 300 mm x 450 mm
See Note 6

SIGN (R100B)
Standard 450 mm x 600 mm
See Note 10

OFF-STREET PARKING SIGNS
(Parking lot or garage)
See Note 6

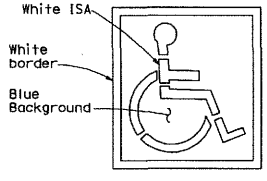

ISA MARKING FOR ACCESSIBLE PARKING SPACE OR STALL
(See Std. Plan A24C)

DETAIL A

ISA = International Symbol of Accessibility

NOTES

1. Accessible parking spaces serving a particular building shall be located on the shortest accessible route of travel from adjacent parking to an accessible entrance. In parking facilities that do not serve a particular building, accessible parking shall be located on the shortest accessible route of travel to an accessible pedestrian entrance of the parking facility.
2. One in every eight accessible off-street parking stalls, but not less than one, shall be served by an accessible aisle of 2.44 m minimum width and shall be signed van accessible. The R99A "Van Accessible" sign shall be mounted below the R99 "ISA Parking" sign.
3. In each parking stall, a curb or bumper shall be provided and located to prevent encroachment of vehicles over the required width of walkways. Parking stalls shall be so located that persons with disabilities are not compelled to wheel or walk behind parked cars other than their own.
4. Surface slopes of accessible off-street parking stalls shall be the minimum possible and shall not exceed 2 percent in any direction.
5. Table A shall be used to determine the required number of accessible parking stalls in each parking lot or garage.
6. Where R99 "ISA Parking" or R99A "Van Accessible" signs are installed, the bottom of the sign panel shall be a minimum of 2.1 m above the surrounding surface.
7. Curb ramps shall conform to the details shown on Revised Standard Plan RSP A88A.
8. Blue paint, instead of white may be used for marking accessibility aisles in areas where snow may cause white markings to not be visible.
9. The words "NO PARKING", shall be painted in white letters no less than 305 mm high and located so that it is visible to traffic enforcement officials. See Standard Plan A90B for details of the "NO PARKING" pavement marking.
10. A R100B sign shall be posted in a conspicuous place at each entrance to off-street parking facilities or immediately adjacent to and visible from each stall. The sign shall include the address where the towed vehicle may be reclaimed and the telephone number of the local traffic law enforcement agency.
11. Where a single (non-van) accessible parking space is provided, the loading and unloading access aisle shall be on the passenger side of the vehicle as the vehicle is going forward into the parking space.
12. Where a van accessible parking space is provided, the loading and unloading access aisle shall be 2.44 m wide minimum, and shall be on the passenger side of the vehicle as the vehicle is going forward into the parking space.

DIST	COUNTY	ROUTE	KILOMETER POST TOTAL PROJECT	SHEET NO.	TOTAL SHEETS

REGISTERED CIVIL ENGINEER

December 16, 2005
PLANS APPROVAL DATE

Hector David Cordova No. C41957 Exp. 3-31-06 CIVIL STATE OF CALIFORNIA

The State of California or its officers or agents shall not be responsible for the accuracy or completeness of electronic copies of this plan sheet.

To get to the Caltrans web site, go to: http://www.dot.ca.gov

STATE OF CALIFORNIA
DEPARTMENT OF TRANSPORTATION

ACCESSIBLE PARKING OFF-STREET

NO SCALE

ALL DIMENSIONS ARE IN MILLIMETERS UNLESS OTHERWISE SHOWN

RSP A90A DATED DECEMBER 16, 2005 SUPERSEDES STANDARD PLAN A90A DATED JULY 1, 2004-PAGE 119 OF THE STANDARD PLANS BOOK DATED JULY 2004.

REVISED STANDARD PLAN RSP A90A

2004 REVISED Std PLAN RSP A90A

12-16-05

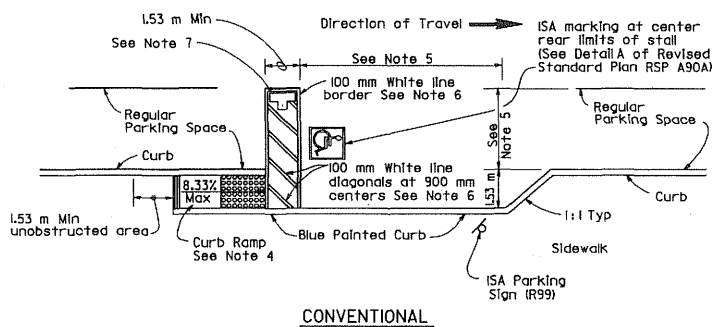

CONVENTIONAL

(See Note 9)

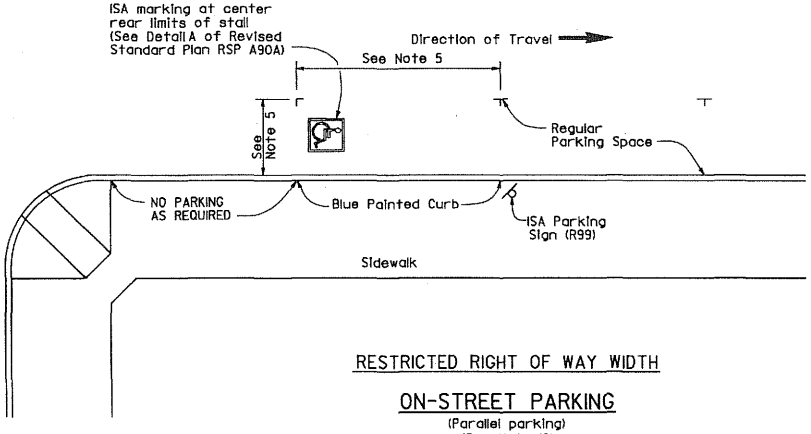

RESTRICTED RIGHT OF WAY WIDTH

ON-STREET PARKING

(Parallel parking)
(See Note 10)

PAVEMENT MARKING

See Note 7

ISA PARKING SIGN (R99)
Standard 300 mm x 450 mm
See Note 3

ISA = International Symbol of Accessibility

DIST	COUNTY	ROUTE	KILOMETER POST TOTAL PROJECT	SHEET NO.	TOTAL SHEETS

REGISTERED CIVIL ENGINEER

December 16, 2005
PLANS APPROVAL DATE

REGISTERED PROFESSIONAL ENGINEER Hector David Cordova No. C41957 Exp. 3-31-06 CIVIL STATE OF CALIFORNIA

The State of California or its officers or agents shall not be responsible for the accuracy or completeness of electronic copies of this plan sheet.

To get to the Caltrans web site, go to: http://www.dot.ca.gov

NOTES

1. Parking spaces shall be so located that persons with disabilities are not compelled to wheel or walk behind parked cars other than their own.
2. Surface slopes of accessible on-street parking spaces shall be the minimum feasible.
3. Where R99 "ISA Parking Signs" are installed, the bottom of the sign panel shall be a minimum of 2.1 m above the surrounding surface.
4. Curb ramps shall conform to the details shown on Revised Standard Plan RSP A88A.
5. Accessible on-street parking spaces shall not be smaller in length or width than that specified by the local jurisdiction for other parking spaces, but not less than 6.1 m in length and not less than 2.4 m in width.
6. Blue paint, instead of white may be used for marking accessibility aisles in areas where snow may cause white markings to not be visible.
7. The words "NO PARKING", shall be painted in white letters no less than 305 mm high on a contrasting background and located so that it is visible to traffic enforcement officials. See Standard Plan A24E for square meter area for painting the words "NO PARKING".
8. There shall be no obstructions on the sidewalk adjacent to and for the full length of the parking space, except for the ISA parking sign shown.
9. The Conventional detail should be the primary choice of accessible on-street parking. However, if the sidewalk lacks adequate space to construct a standard curb ramp, the Restricted Right of Way detail should be used.
10. If the Restricted Right of Way width detail is selected and it conflicts with a bus stop or other uses, this detail may apply to the other end of the block.

STATE OF CALIFORNIA
DEPARTMENT OF TRANSPORTATION

ACCESSIBLE PARKING ON-STREET

NO SCALE

RSP A90B DATED DECEMBER 16, 2005 SUPERSEDES STANDARD PLAN A90B DATED JULY 1, 2004-PAGE 120 OF THE STANDARD PLANS BOOK DATED JULY 2004.

REVISED STANDARD PLAN RSP A90B

2004 REVISED Std PLAN RSP A90B

12-16-05